JPL D-71874



Mars Exploration Program — Mars Relay Network Handbook

Release 4

Neil F. Chamberlain, Editor
Jet Propulsion Laboratory / California Institute of Technology

National Aeronautics and
Space Administration

Jet Propulsion Laboratory
California Institute of Technology
Pasadena, California

April 27, 2026

This research was carried out at the Jet Propulsion Laboratory, California Institute of Technology, under a contract with the National Aeronautics and Space Administration.

Reference herein to any specific commercial product, process, or service by trade name, trademark, manufacturer, or otherwise, does not constitute or imply its endorsement by the United States Government or the Jet Propulsion Laboratory, California Institute of Technology.

© 2026 California Institute of Technology. Government sponsorship acknowledged.

Jet Propulsion Laboratory
California Institute of Technology

Mars Exploration Program —

Mars Relay Network Handbook

RELEASE 4

SIGNATURES

Edited by:

E-SIGNED by Neil Chamberlain
on 2026-07-22 22:56:15 GMT

Neil F. Chamberlain — Date
RF / Microwave Engineer

Approved by:

E-SIGNED by Roy Gladden
on 2026-07-22 23:21:53 GMT

Roy Gladden — Date
Manager, Mars Relay Network

CONCURRENCE

Concurred by:

E-SIGNED by Paul Fieseler
on 2026-07-23 15:44:40 GMT

Paul Fieseler — Date
Mars Reconnaissance Orbiter

E-SIGNED by Peter Schmitz
on 2026-07-23 06:55:15 GMT

Peter Schmitz — Date
Mars Express / ESA
ExoMars Trace Gas Orbiter / ESA

E-SIGNED by Glen Havens
on 2026-07-29 21:11:16 GMT

Glen Havens — Date
Mars Odyssey

E-SIGNED by Brandon Sauer
on 2026-07-27 17:10:52 GMT

Brandon Sauer — Date
MGSS Relay Manager

CHANGE LOG

DATE	SECTIONS CHANGED	CHANGE DESCRIPTION / REASON FOR CHANGE	REVISION
06/15/2011	-		Initial Draft
08/01/2011	All	Preliminary Draft for review and comment	Preliminary Draft 0
01/18/2012	All	Preliminary Release – approved for export LRS LRR004902	Preliminary Release 1
10/31/2013	All	Incorporates reviews following Preliminary Release, Jay Gao, Editor	Release 2
03/01/2015	All	Cumulative updates since 2013, Jay Gao, Editor	Release 2.1
05/14/2021	All	Cumulative updates since 2015, Francis Tayor, Editor	Release 3
04/27/2026	All	Cumulative updates since 2021, Neil Chamberlain, Editor	Release 4

CONTENTS

Signatures and Concurrence iii

Change Log iv

1 Introduction 1-1
- 1.1 Purpose 1-1
- 1.2 Scope 1-1
- 1.3 Document and Organization Relationships 1-2
- 1.4 Acknowledgments 1-5

2 Mars Relay Network Overview 2-1
- 2.1 End-to-End Overview of Mars Relay Network 2-1
  - 2.1.1 Coordination between Relay and Science Operations 2-3
  - 2.1.2 Mars Relay Network Services 2-4
- 2.2 Summary of Relay Orbiters 2-4
- 2.3 Summary of End-to-End Services and Protocol Standards 2-7
  - 2.3.1 Proximity-1 Protocol 2-12
  - 2.3.2 Reference Documents 2-19
  - 2.3.3 CCSDS File Delivery Protocol 2-19
  - 2.3.4 Space Packet Protocol 2-19
  - 2.3.5 Deep Space Data Link Protocols 2-19

3 Mars Relay Network Services and Interfaces 3-20
- 3.1 Mars Odyssey 3-20
  - 3.1.1 Overview 3-20
  - 3.1.2 Odyssey UHF Transceiver and Antenna 3-22
  - 3.1.3 Odyssey UHF Radio Frequency Services 3-26
  - 3.1.4 Odyssey – MSL UHF Link Budgets (Design Control Tables) 3-29
  - 3.1.5 RF Deep-Space Link 3-30
  - 3.1.6 End-to-End Data Flow and Network Services 3-32
  - 3.1.7 Idiosyncrasies, Limitations, and Other Notes 3-37
  - 3.1.8 Reference Documents 3-39
- 3.2 Mars Express 3-40
  - 3.2.1 Overview 3-40
  - 3.2.2 MEX UHF Transceiver and Antenna 3-41
  - 3.2.3 RF Proximity Link Services 3-44
  - 3.2.4 Mars Express - MSL UHF Link Budgets (Design Control Tables) 3-45
  - 3.2.5 RF Deep-Space Link 3-46
  - 3.2.6 End-to-End Data Flow and Network Services 3-47
  - 3.2.7 Idiosyncrasies and Limitations 3-49
  - 3.2.8 Reference Documents 3-50
- 3.3 Mars Reconnaissance Orbiter 3-52
  - 3.3.1 Overview 3-52
  - 3.3.2 MRO UHF Transceiver and Antenna 3-54
  - 3.3.3 MRO UHF Services 3-57
  - 3.3.4 MRO - MSL UHF Link Budgets (Design Control Tables) 3-61
  - 3.3.5 RF Deep-Space Link Services 3-63
  - 3.3.6 End-to-end Data Flow and Network Services 3-65
  - 3.3.7 Idiosyncrasies, Limitations, and Other Notes 3-69

3.3.8 Reference Documents 3-70
3.4 ExoMars Trace Gas Orbiter 3-72
3.4.1 Overview 3-72
3.4.2 TGO UHF Transceiver and Antenna 3-73
3.4.3 RF Proximity Link Services 3-77
3.4.4 TGO – Curiosity UHF Link Budgets (Design Control Tables) 3-79
3.4.5 RF Deep-Space Link Services 3-81
3.4.6 End-to-End Data Flows and Network Services 3-82
3.4.7 Operational Considerations, Idiosyncrasies, and Limitations 3-84
3.4.8 Reference Documents 3-85
4 Relay Operations 4-1
4.1 Multimission Relay Coordination 4-1
4.2 Latency 4-2
4.3 EDL Considerations 4-3
4.4 Compatibility Testing of Relay Service User Radios 4-4
4.5 Computation of relay view periods 4-4
5 Relay Telecom Design Issues and Challenges 5-1
5.1 EMI Impacts 5-1
5.2 Mars Orbiter Link Geometry 5-1
5.2.1 Low, Near-circular Mars Orbits 5-1
5.2.2 Non-Sun Synchronous Mars Orbits 5-2
5.3 EDL 5-2
5.4 RELAY Throughput 5-2
5.4.1 Return-Link and Forward-Link Efficiency 5-2
5.4.2 Anomalous Throughput 5-3
5.5 Data Volume Predicts 5-4
5.6 Proximity-1 Settings 5-4
5.7 Spacecraft and Subsystem LIFETIME Issues 5-4
5.8 Mars Network Use Planning 5-5
6 Lessons Learned 6-1
Appendix A Link Budget Calculations A-1
Appendix B Adaptive Data Rate Settings B-3
Appendix C Acronyms and Abbreviations C-5

List of Figures

Figure 1-1: Relationship among key MRN service level, interface, and process documents. 1-2
Figure 2-1: MRN architecture. 2-1
Figure 2-2: MRN architecture block diagram. 2-2
Figure 2-3: Cross support MRN architecture. 2-2
Figure 2-4: Relay planning and coordination process. 2-3
Figure 2-5: Proximity-1 UHF Bands, MHz 2-6
Figure 2-6: Data units and interfaces for service provider and its users. 2-8

Figure 2-7: Data units and interfaces of the MRN. 2-8
Figure 3-1: Mars Odyssey. 3-20
Figure 3-2: Block diagram of Odyssey UHF subsystem. 3-22
Figure 3-3: ODY UHF return-link patterns. *Upper:* 2D composite pattern. *Lower:* 1D pattern cuts. 3-24
Figure 3-4: ODY UHF forward-link patterns. *Upper:* 2D composite pattern. *Lower:* 1D pattern cuts. 3-25
Figure 3-5: Odyssey X-band block diagram. 3-30
Figure 3-6: ODY X-band data rates to DSN (MCD3 decoder). 3-31
Figure 3-7: ODY X-band data rates to DSN (MCD2 decoder). 3-32
Figure 3-8: ODY UHF relay data flow. 3-33
Figure 3-9: ODY return-link relay telemetry flow. 3-34
Figure 3-10: ODY forward-link command flow. 3-36
Figure 3-11: Mars Express (MEX). 3-40
Figure 3-12: MEX UHF return-link patterns. *Upper:* 2D composite pattern. *Lower:* 1D pattern cut. 3-42
Figure 3-13: MEX UHF forward-link patterns. *Upper:* 2D composite pattern. *Lower:* 1D pattern cut. 3-43
Figure 3-14: MEX X-band block diagram. 3-46
Figure 3-15: MEX X-band data rates. 3-47
Figure 3-16: End-to-end UHF relay data flow between ESOC and MEX. 3-48
Figure 3-17: MEX forward-link command data flow. 3-49
Figure 3-18: Mars Reconnaissance Orbiter. 3-52
Figure 3-19: MRO relay communication system. 3-54
Figure 3-20: MRO UHF return-link patterns. *Upper:* 2D composite pattern. *Lower:* 1D pattern cuts. 3-55
Figure 3-21: MRO UHF forward-link patterns. *Upper:* 2D composite pattern. *Lower:* 1D pattern cuts. 3-56
Figure 3-22: MRO UHF and X-band block diagram. 3-64
Figure 3-23: MRO X-band data rates to DSN. 3-64
Figure 3-24: MRO return-link telemetry data flow. 3-66
Figure 3-25: MRO forward-Link command end-to-end data flow 3-67
Figure 3-26: ExoMars / Trace Gas Orbiter 3-72
Figure 3-27: TGO proximity communication system. 3-73
Figure 3-28: TGO UHF return-link patterns. *Upper:* 2D composite pattern. *Lower:* 1D pattern cut. 3-75
Figure 3-29: TGO UHF forward-link patterns. *Upper:* 2D composite pattern. *Lower:* 1D pattern cut. 3-76
Figure 3-30: TGO X-band data rates. 3-82
Figure 3-31: TGO return-link data flow for NASA landers. 3-83
Figure 3-32: TGO forward-link command data flow. 3-84
Figure 4-1: Multimission Mars relay coordination process. 4-2

List of Tables

Table 1-1: MEP relay document description. 1-3
Table 1-2: Reference documents for the MRN. 1-3
Table 2-1: Mars relay services. 2-4
Table 2-2: Mars relay orbiter mission overview. 2-5
Table 2-3: Mars relay orbiter characteristics. 2-5
Table 2-4: Mars relay orbiter RF characteristics. 2-6
Table 2-5: Oscillator stability and Doppler data accuracy due to oscillator noise. 2-7
Table 2-6: Open Loop Recording sampling characteristics. 2-7
Table 2-7: Summary of return-link telemetry services. 2-9
Table 2-8: Summary of forward-link commanding services. 2-10
Table 2-9: Communication protocol standards of Mars orbiters. 2-11
Table 2-10: Proximity-1 directives. 2-13
Table 2-11: Proxmity-1 and other capabilities of MRN orbiters. 2-17
Table 2-12: G2 Inversion support. 2-18
Table 3-1: ODY orbital parameters. 3-21
Table 3-2: Summary of ODY RF services. 3-26
Table 3-3: ODY typical receiver RF thresholds. 3-28
Table 3-4: ODY-MSL link budget. 3-29
Table 3-5: ODY memory allocation (example). 3-35
Table 3-6: ODY relay packet buffer allocation for MSL EDL and surface communication (example). 3-35
Table 3-7: MEX orbital parameters. 3-40
Table 3-8: MEX RF services. 3-44
Table 3-9: MEX receiver thresholds. 3-44
Table 3-10: MEX-MSL link budget. 3-45
Table 3-11: MRO orbital parameters. 3-53
Table 3-12: MRO UHF front end losses. 3-55
Table 3-13: MRO RF services. 3-58
Table 3-14: MRO receiver thresholds (dBm). 3-61
Table 3-15: MRO-MSL link budget. 3-62
Table 3-16: MRO UHF system losses. 3-70
Table 3-17: ExoMars/TGO orbit elements. 3-73
Table 3-18: TGO RF services. 3-78
Table 3-19: Typical in-flight Electra receive signal level threshold (dBm). 3-79
Table 3-20: TGO-M20 link budget. 3-80
Table 5-1: Electra data transfer efficiencies and ADR switch times. 5-3
Table A-1: Link budget calculation. A-1

1 INTRODUCTION

Over the past two decades, the National Aeronautics and Space Administration (NASA) has established a confederated set of Mars science orbiters equipped with ultra-high frequency (UHF) proximity link payloads capable of providing communications, navigation, and timing services to user mission spacecraft at and near Mars. Due to the much shorter range over which these proximity links operate, relative to the distance between Mars and Earth, user spacecraft can access these orbiter-provided services with smaller, lighter, simpler communications payloads, achieving higher data rates at lower energy-per-bit costs. This results in an increase in data rate and data volume as well as energy efficiency on the user spacecraft.

This collection of relay-equipped orbiters and landers is referred to as the Mars Relay Network (MRN). The benefits of the MRN were first demonstrated in 2004 based on the successful relay support to the Spirit and Opportunity rovers by the Mars Global Surveyor (MGS) and the Mars 2001 Odyssey Orbiter (ODY). Since then, the Mars Reconnaissance Orbiter (MRO) and the Mars Atmosphere and Volatile Evolution (MAVEN) orbiter became additional elements in the network (MGS having been lost in 2006 and MAVEN having been lost in 2025). In addition, interagency cross-support has been demonstrated with ongoing relay services provided by the European Space Agency's (ESA) Mars Express (MEX) Orbiter and the ExoMars Trace Gas Orbiter (TGO), which now serve as additional elements in the MRN.

Since 2004, the MRN has returned over 99% of the data from NASA's rovers and landers on the surface of Mars using these UHF relay links, as opposed to direct-to-Earth X-band links. Future Mars-bound landers and rovers from NASA and ESA are already planning to utilize MRN services, and future Mars orbiters are expected to include standardized relay payloads in order to replenish the MRN as a critical infrastructure for sustained Mars exploration.

1.1 PURPOSE

The purpose of this document is to define MRN relay service capabilities for use in planning future Mars missions. While the MRN is composed of hybrid science-telecom orbiters, each with unique characteristics driven by its science objectives, this MRN Handbook endeavors to present the key specifications of each of the MRN orbiters in a common format, at a level suitable to support user mission planning and analysis. The predominant focus of this handbook is on the proximity link for Mars relay services.

1.2 SCOPE

This handbook defines the high-level relay service capabilities available with the current relay-equipped Mars orbiters. Note that this handbook does not describe services for Direct-to-Earth (DTE) deep-space links. However, some high-level information is provided for context to describe the end-to-end custody of data as it is exchanged to and from the landed spacecraft.

The handbook includes services that support proximity communications, radiometrics for navigation, and time correlation services for various operational phases:

- Pre-launch
  - Relay compatibility testing
- Post-launch
  - In-flight relay testing
  - Mars final approach
  - Entry, descent, and landing (EDL) or Mars orbit insertion (MOI)
  - Mars post-arrival operations
  - Mars ascent and orbit/departure

This document should be expected to be updated with new information as future Mars orbiters are considered.

1.3 DOCUMENT AND ORGANIZATION RELATIONSHIPS

The coordination of the planning and execution of MRN services is defined by a set of documents that controls the service level, provider-user interfaces, and relay operation processes. Figure 1-1 shows the relationship among key documents.

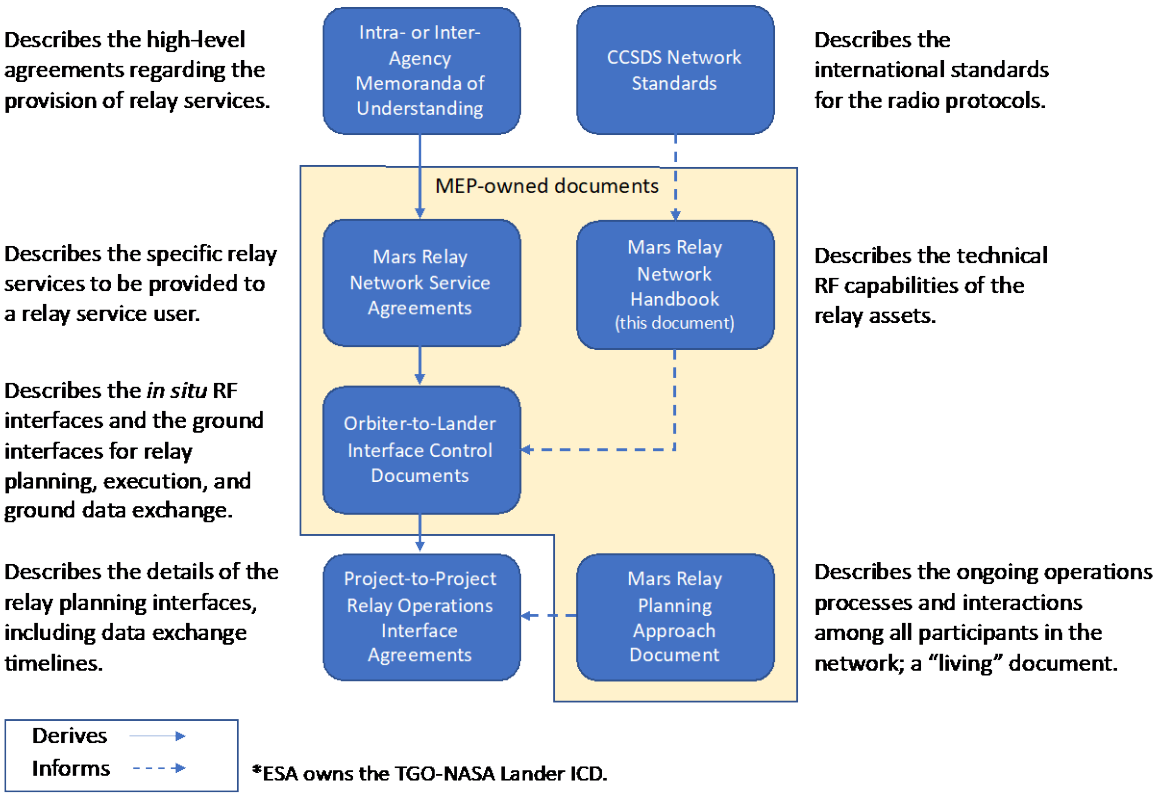

Figure Acronyms: CCSDS – Consultative Committee for Space Data Systems; ICD – Interface Control Document; MEP – Mars Exploration Program; RF – Radio Frequency.

Figure 1-1: Relationship among key MRN service level, interface, and process documents.

Table 1-1 provides a summary description of each key document. The Applicable Phases in the table are consistent with the NASA definitions in document NPR 7120.5F.

Table 1-1: MEP relay document description.

Document Title	Document Owner	Applicable Phases[1]	Description
MRN Handbook (this document)	MEP	Pre-Phase A to Phase A	Provides an overview of the services and performance specifications for each orbiter asset within the MRN. Information provided includes orbit description, proximity link and deep-space link telecommunications performance parameters, end-to-end relay data flow, relay idiosyncrasies, and references to other applicable documents. MEP Mars Relay Network Handbook, JPL D-71874, Release 4
MRN Service Agreement	MEP	Preliminary at Mission Concept Review (MCR), Final at Prelim-inary Design Review (PDR)	Describes the integrated Mars Program-level agreement for provision of MRN services to a given relay user. Documents user relay service requirements, potentially including critical event communication scenarios (e.g., EDL), ongoing surface relay support, MRN orbiter service commitments, and cross-project Verification & Validation (V&V) test and training activities.
Project-to-Project Relay Interface Control Document (ICD)	MEP	Preliminary at PDR, Final at Critical Design Review (CDR)	Documents the detailed project-to-project relay interface requirements, including the specific proximity link configurations (UHF frequencies, data rates, modulation and coding schemes) that will be employed, as well as the end-to-end data flow including applicable ground data system (GDS) interfaces.
Mars Relay Operations Planning Approach Document (PAD)	MEP	Phase D–Phase E	Documents the ongoing mission operations processes and timelines for coordinating and executing relay activities across the MRN. Used as primary guidance for relay operations test and training activities prior to arrival at Mars. Mars Relay Operations Planning Approach Document – Version 3.0, 31 March 2023, Eve Pereira, JPL D-101973
Relay Project-to-Project OIAs[2]	Interfacing Projects	Phase D–Phase E	Contains product name, generating team, receiving team, product description, format and content, reference Software Interface Specification (SIS), product delivery timing and frequency, application mission phase, and method of delivery.

In addition to the program and project documents, there is a set of reference documents (such as radio handbooks, standards, conference papers, white papers, and memorandums) that serve to point out issues and operational experiences, clarify relay payloads' capabilities, as well as their observed performance and idiosyncrasies. Table 1-2 contains a non-exclusive list of relevant reference documents.

Table 1-2: Reference documents for the MRN.

Category	Document List
C/TT-505 (CE-505)	• *UHF Transceiver Model CE 505 Theory of Operation/User's Manual,* CMCEC Document #648855, Rev 1.2, 4 May 2001, CMC Electronics Cincinnati.
Electra	• D. Bell, *Electra-CE 505 Radio Compatibility,* IOM Electra-03-061, 23 June 2003. • *Mars Reconnaissance Orbiter UHF Telecommunications System Operations Handbook*, Ver 2.0, 12 May 2011, JPL D-35870.

[1] NASA NPR 7120.5F, *NASA Procedural Requirements,* Chapter 2. NASA Life Cycles for Space Flight Programs and Projects, Document release date 03 August 2021, expiration date 03 August 2026.

[2] These Operational Interface Agreements (OIAs) can be hosted on the Mars Relay Operations Service (MaROS).

Table 1-2: Reference documents for the MRN.

Category	Document List
Technical Studies	• M. Shihabi, et.al., *Electra Loopback Performance Sensitivity to the Channel Frequency: OTB and Electra EM Lab Test Results,* 337-MMS-20100121-004, 1 January 2010 • *MSL to MRO UHF Path Loss, 395 MHz vs. 405 MHz,* 337-DJB-20090609-063, 9 June 2009. • D. Bell, et. al., *Alternate Proximity-1 Channel Support for MSL: Initial Lab Test Results,* 337-DJB-20090520-060, 20 May 2009. • *Electra-CE 505 Radio Compatibility*, ELECTRA IOM 03-061, 23 June 2003
NASA Procedural Requirements	• *NASA Space Flight Program and Project Management Requirements,* change 18, expiration date 14 December 2021. Chapter 2, NASA Life Cycles for Space Flight Programs and Projects.
Relay Operations Concept	• *Mars Relay Description for Discovery 2019 Proposals*, Mars Exploration Program, NASA/JPL, 10 April 2019. • R. Gladden, et al., *Implementing Next Generation Relay Services at Mars in an International Relay Network*, SpaceOps 2018, Marseille, France, May 2018. • D. Wenkert, et al., *Enabling International Data Relay at Mars*, SpaceOps 2016, Daejeon, Republic of Korea, May 2016. • R. Gladden, *Mars Relay Operations Service (MaROS): A present Service Preparing for the Future,* AIAA SpaceOps 2014 Conference, Pasadena, CA, May 2014. • N. Chamberlain, et al., *MAVEN Relay Operations Concept*, 2012 IEEE/AIAA Aerospace Conference, Big Sky, MT, March 2012. • D. Bell, et. al., *MRO Relay Telecom Support of Mars Science Laboratory Surface Operations,* 2013 AIAA/IEEE Aerospace Conference, Big Sky, MT, March 2013. • R. Gladden, et al., *Preparing the Mars Relay Network for the Arrival of the Perseverance Rover at Mars*, 2022 IEEE/AIAA Aerospace Conference, Big Sky, MT, March 2022. • R. Gladden, et al., *Lessons Learned from the Mars Relay Network: Considerations for Future Relay Networks,* 2024 IEEE/AIAA Aerospace Conference, Big Sky, MT March 2024. • B. Sauer, *Mars Relay Operations Service (MaROS): Adapting to the Needs of the Mars Relay Network*, SpaceOps 2025, Montreal, Canada, May 2025.
Orbit Information	• C. Edwards, *Updated Information on Orbit States of NASA Relay Orbiters for Telecommunications Support of the Insight Lander and EMTGO EDM,* JPL IOM# 6060-CDE-13-001, 1 February 2013.
Odyssey (ODY)	• *2001 Mars Odyssey Relay Operations Plan,* JPL D-87831, 28 January 2015. • *Odyssey Telecommunications: DESCANSO Design and Performance Summary Series,* Article 6, JPL, October 2002. • *Mars 2001 Odyssey,* Telecommunications System Operations Handbook Version 3.0, PD 722-802, JPL D-19010, 27 March 2001.
Mars Express (MEX)	• *Mars Express Support to NASA Mars 2020 – Service Agreement and ICD*, Ref. MEX-ESC-TN-5197, Issue 1.1, 28 July 2020. • *Mars Express Support to InSight Service Agreement and ICD*, Ref. MEX-ESC-TN-5179, Issue 1.0, 27 February 2019. • *Mars-Express Support to MSL EDL and Curiosity On-Surface Operations, ICD and Ops concept,* Ref. MEX-ESC-TN-5175, Issue 01 Rev. 0, 28 June 2012. • *MELACOM Upgrade in Support of MSL – Verification and Validation Test Report,* Ref. QINETIQ/TS/AS/TPN1101289, Issue 05, 25 May 2012. • *MSL & MEX Interoperability Test Report,* Ref. QINETIQ/TS/AS/TSTR1200287, Issue 01, 25 May 2012. • *MELACOM UHF Transponder for MEX User Manual,* Ref. MEX-DER-TN-205, Issue 4.0, March 2012.

Table 1-2: Reference documents for the MRN.

Category	Document List
Mars Reconnaissance Orbiter (MRO)	• *MRO Relay Data and Operations ICD*, Rev 1.1, JPL D-101966, 15 November 2019. • R. Gladden, et al., *Mars Reconnaissance Orbiter (MRO) Relay Throughput Anomaly Investigation Final Report*, JPL D-102990, 19 February 2020. • C. Edwards, et al., *Assessments of EMI Impacts on MRO Receiver Thresholds*, IOM TGO-640-003-14, 27 August 2014. • D. Bell, *A Brief History of MRO UHF EMI Issues*, IOM 337-DJB-20090504-047, 15 May 2009. • B. Arnold, *MRO/Stanford UHF Test Report,* JPL D-31161, 23 February 2006. • *Mars Reconnaissance Orbiter Specification for Product Telemetry CFDP*, MRO-37-582, JPL D-24901, April 2003.
ExoMars/TGO	• *TGO to NASA Relay User ICD,* EXM-GS-ICD-ESC-00001, Issue 3.1, 15 July 2020. • *Exomars TGO Data Relay User Manual,* Ref: EXM-GS-UMA-ESC-20003, Issue 1.0, 3 May 2017.
Consultative Committee on Space Data Systems (CCSDS) Green Book	• *Mars Mission Protocol Profiles—Purpose and Rationale,* CCSDS 740.0-G-1, Green Book, July 2008. • *TM Synchronization and Channel Coding,* Green Book, CCSDS 130.1-G-3, June 2020 (http://public.ccsds.org/publications/archive/130x1g3.pdf)
Space Packet and Space Link Protocol Specifications	• The Space Packet Protocol (CCSDS 133.0-B-1) • Telemetry (TM) Space Data Link Protocol (CCSDS 132.0-B-1) • Telecommand (TC) Space Data Link Protocol (CCSDS 232.0-B-3) • Advanced Orbiting Systems (AOS) Space Data Link Protocol (CCSDS 732.0-B-2)
CCSDS File Delivery Protocol (CFDP)	• Recommendations: CCSDS 727.0-B-5 (Blue Book) • Introduction and Overview: CCSDS 720.1-G-3 (Green Book) • Implementers Guide: CCSDS 720.2-G-3 (Green Book)
Proximity-1 Protocol Specifications	• Data Link Layer: CCSDS 211.0-B-6 (Blue Book) • Physical Layer: CCSDS 211.1-B-4 (Blue Book) • Coding & Synchronization Sublayer: CCSDS 211.2-B-3 (Blue Book) • Rationale, Architecture and Scenario: CCSDS 210.0-G-2 (Green Book)

1.4 ACKNOWLEDGMENTS

The authors would like to acknowledge the following people for their help in creating this document: Shanti Ancheta, Kenneth Andrews, Brad Arnold, Andrea Barbieri, Dave Bell, Carole Boyles, Gene Brower, Stanley Butman, Jared Call, Neil Chamberlain, Kar-Ming Cheung, Monika Danos, Stuart Demcak, Ann Devereaux, Chad Edwards, Harvey Elliott, Todd Ely, Pasquale Esposito, Allen Farrington, Paul Feiseler, Jay Gao, Roy Gladden, James Godfrey, Dongsuk Han, Shin Huh, Peter Ilott, David Jefferson, Grailing Jones, Chi-Wung Lau, Austin Lazaro, Charles Lee, Bruce McLaughlin, Ricardo Mendoza, Premkumar Menon, Ken Peters, Chris Potts, Michael Pugh, Olivier Reboud, Brandon Sauer, Maria Schellpfeffer, Peter Schmitz, Mazen Shihabi, Simon Wood, Francis Taylor, Mary Young.

2 MARS RELAY NETWORK OVERVIEW

2.1 END-TO-END OVERVIEW OF MARS RELAY NETWORK

The Mars Relay Network (MRN) architecture consists of functions, equipment, and interfaces for servicing user mission elements at and in the vicinity of Mars. The functions performed include forward-link commanding, return-link data return, radiometric data collection, open loop recording, and time services. The MRN includes relay-equipped Mars science orbiters, the respective orbiter ground data systems (GDSs) on Earth, and appropriate interfaces connecting the user's flight and ground systems to the MRN.

Figure 2-1 illustrates the MRN interfaces between the Mars relay orbiters and user spacecraft at or near Mars (relay proximity links), and between the relay orbiters and antennas on Earth (relay deep-space links). Links in the direction Earth-to-orbiter-to-Mars are called "forward links," and links in the direction Mars-to-orbiter-to-Earth are called "return links." Services based on direct-to-Earth deep-space links are not included in this handbook, but an overview is provided.

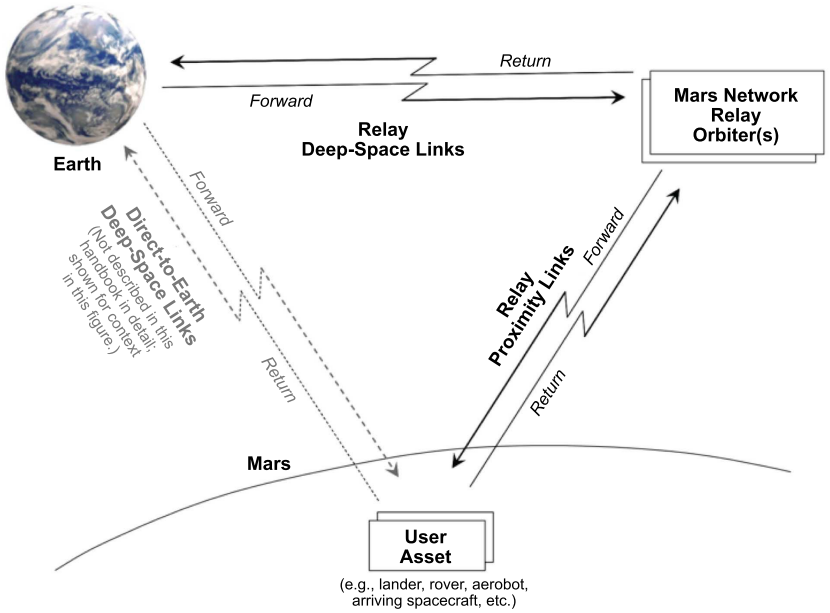

Figure 2-1: MRN architecture.

MRN interfaces also exist on Earth between the relay-orbiter GDSs and the deep-space antennas, between the relay-orbiter GDSs[3] and the user mission GDSs, and between the Jet Propulsion Laboratory (JPL)-provided Mars Relay Operations Service (MaROS) and the user mission GDSs. Figure 2-2 generically depicts the MRN architecture block diagram, including the major interfaces at Earth and at Mars as well as return- and forward-link data flows.

[3] In this document, both relay orbiter GDS and user mission GDS may include mission-specific processing and storage services provided by the Deep Space Network (DSN). For simplicity of presentation, we subsume the DSN services provided to the orbiter and the user mission as part of their GDSs. Detail of DSN processing in the end-to-end data flow are described explicitly in the End-to-End Information System (EEIS) section in the orbiter relay service Interface Control Documents (ICDs).

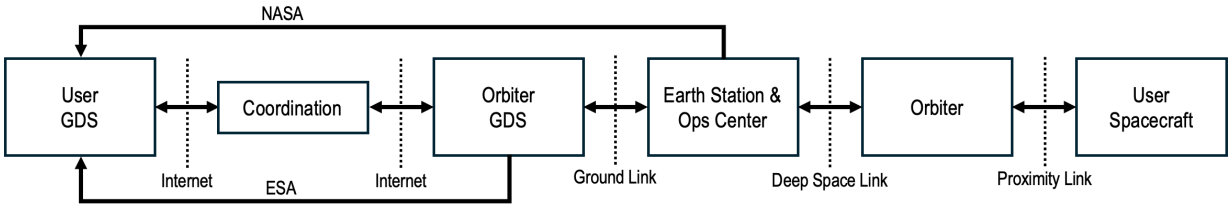

Figure 2-2: MRN architecture block diagram.

An extension of the MRN architecture that includes cross support with the European Space Agency (ESA) orbiters and landers is illustrated in Figure 2-3. This diagram is also intended to generically reflect interfaces and data flows (for which more detailed explanations are provided in Section 3). Four primary return-link data paths are enumerated. NASA Mars orbiters currently communicate with Earth exclusively via the Deep Space Network (DSN). ESA Mars orbiters communicate with Earth via the European Space Tracking (ESTRACK) network, the DSN, and the Russian Complex for Receiving Science Information (referred to as RKPNI). When NASA users relay through ESA orbiters, the ground stations are either the DSN or ESTRACK, or RKPNI. The Deep Space Operations Center (DSOC) distributes relay data product files to NASA user GDSs, while the ESA Relay Coordination Office (ERCO) distributes relay data product files to ESA user GDSs. A similar architecture is expected to be utilized in the future when a NASA orbiter collects return-link data from an ESA lander. For example, for a relay session between an ESA lander an ESA orbiter relayed to Earth via the DSN, the data would be routed to the ESA orbiter GDS for processing before being passed to ERCO to distribute to the ESA user GDS.

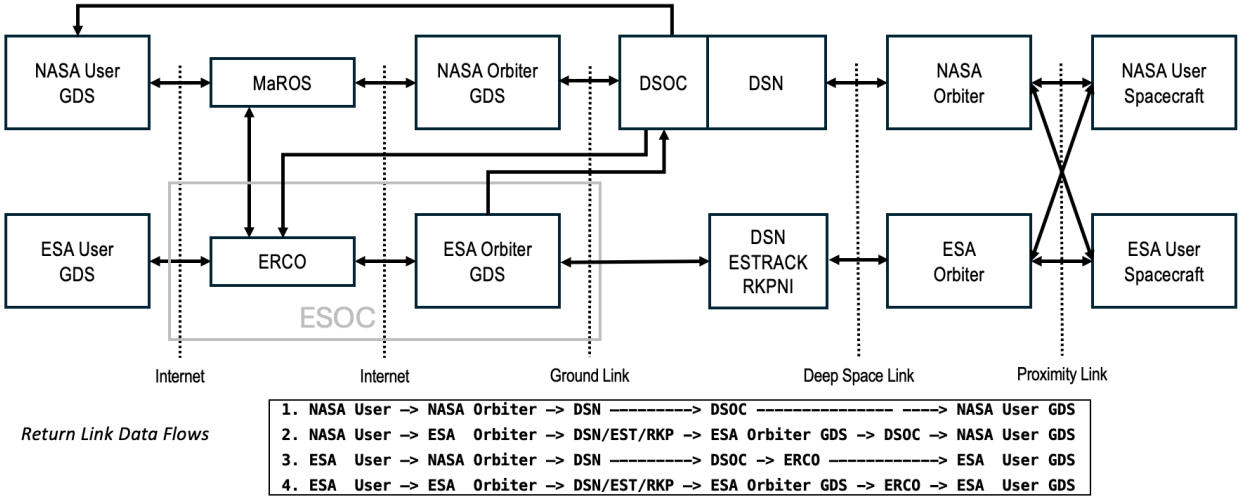

Figure 2-3: Cross support MRN architecture.

MaROS supports the relay coordination and scheduling efforts of all the mission operators, providing a common interface for all users. ERCO performs functions needed within ESA for handling relay service requests and other related data, but all relay coordination efforts are centralized in MaROS as a consolidated planning service. ERCO and the ESA orbiter GDS are part of the European Space Operations Center (ESOC) in Darmstadt, Germany.

2.1.1 *Coordination between Relay and Science Operations*

Since all of the current Mars relay orbiters — Odyssey (ODY), Mars Express (MEX), Mars Reconnaissance Orbiter (MRO), and Trace Gas Orbiter (TGO) — have their primary science objectives in addition to their role as relay service providers, coordination between the various relay operators, orbiter operators, and the science teams is critical to the success of both primary science objectives and provisioned relay services.

MaROS serves as an integrated resource, maintained by JPL's Multimission Ground Systems and Services (MGSS) Program, which supports the transfer of information between the various orbiter and lander projects. The scheduling of relay opportunities among relay orbiters and user spacecraft is performed via a set of processes and tools, including MaROS, managed by the Mars Relay Network Office (MRNO) within the Mars Exploration Program (MEP).

MaROS addresses various aspects of the planning and coordination process as shown in Figure 2-4 and defined in the *Mars Relay Operations Planning Approach Document*:

- Strategic planning process — A planning and coordination function that allows the participating projects to designate relay opportunities during an established time period and to implement those opportunities as a baseline plan
- Tactical planning process — A short-term process for quickly enacting changes to the baseline plan
- Forward-link commanding process — A mechanism for forwarding relay data from a landed asset's GDS to the landed asset on the surface of Mars via an orbiting asset
- Return-link data flow process — A mechanism for returning relay data from a landed asset on the surface of Mars to the landed asset's GDS via an orbiting asset
- Relay accountability — A reporting and accountability structure for determining the efficiency of the transfer of data in both the forward- and return-link directions

These processes interrelate to each other, as in Figure 2-4, and thus data associated with them is correlated within MaROS.

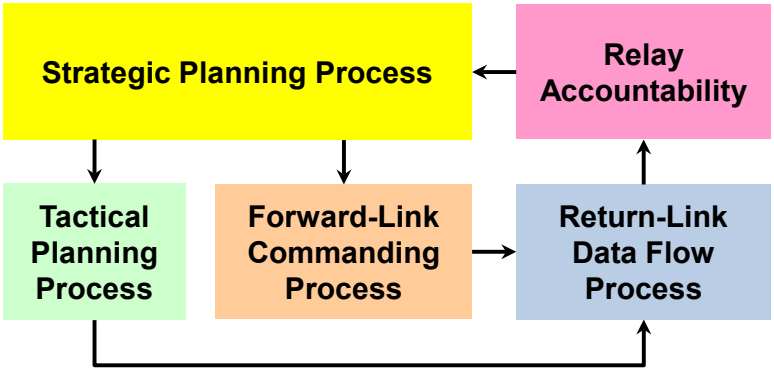

Figure 2-4: Relay planning and coordination process.

2.1.2 *Mars Relay Network Services*

The network of Mars science/relay orbiters provides four types of services to the user missions: communications, navigation, time correlation, and open loop recording.

Table 2-1 shows a high-level summary of the services provided by each relay orbiter. Communication services can provide reliable end-to-end delivery to a mission of user-generated command and telemetry between its spacecraft and the mission GDS. To deliver commands to a spacecraft in the forward-link direction, the user mission first provides the appropriate command file and necessary metadata, such as the desired orbiter and relay session, to MaROS. MaROS then makes the command file available to the orbiter GDS for proper formatting for the orbiter mission. The command is uplinked to the relay orbiter by its GDS for its eventual delivery to the user spacecraft over the proximity link.

Table 2-1: Mars relay services.

Services		**ODY**	**MEX**	**MRO**	**TGO**
Communication Services	Forward-Link Commanding	X	X	X	X
	Return-Link Telemetry	X	X	X	X
Navigation Services	Doppler	X	X	X	X
Open Loop Recording		X	X	X	X
Timing Service				X	X

Return-link telemetry service delivers return-link data received on the ground from each orbiter during scheduled proximity link relay sessions and delivering it to the lander projects. Relay data from a NASA user arriving via an ESA orbiter is made available to the DSN where it is processed and passed along to each user mission GDS just as it is for data relayed by NASA orbiters. A more detailed description of the end-to-end data flow and processing performed by each relay orbiter is provided in subsequent sections of this document.

In addition to communication services, the relay communications equipment carried by the orbiters can also collect navigation data via 1-way and 2-way Doppler measurements and supports open loop recording modes. Also, timing information may be generated by the Proximity-1 protocol, enabling correlation between spacecraft clock (SCLK) and universal time coordinated spacecraft event time (UTC SCET), and the reconstruction of the onboard SCET in UTC.

More details on navigation, open loop recording, and timing services will be provided in Section 2.2, while the end-to-end networking and protocol standards utilized for communication services will be summarized in Section 2.3. Orbiter-specific technical information and descriptions are provided in Section 3.

2.2 SUMMARY OF RELAY ORBITERS

Table 2-2 identifies all the existing Mars orbiters with relay capability. The major milestones associated with the anticipated availability of each of these relay orbiters are included.

Table 2-2: Mars relay orbiter mission overview.

Orbiter →	ODY	MEX	MRO	TGO
Agency	NASA	ESA	NASA	ESA
Orbit Ops to End of Prime Mission	2001–2004	2004–2005	2006–2008	2018–2020

The key characteristics of the MRN relay satellite orbits are shown in Table 2-3. ODY and MRO are in low-altitude, near-polar, Sun-synchronous circular orbits for high-resolution global reconnaissance and mapping; TGO is in a similarly low-altitude orbit, but its orbit is highly inclined. These orbits allow for global relay coverage with short-range and short-duration communication opportunities. MEX is in a high-inclination, highly elliptical orbit with less frequent communication opportunities and highly variable slant ranges.

Table 2-3: Mars relay orbiter characteristics.

Orbiter →	ODY	MEX	MRO	TGO
Epoch (UTC)	29-JAN-2026 00:00:00	01-NOV-2025 23:45:26.95	09-JAN-2026 00:00:00	24-JAN-2026 00:00:00
Semi-Major Axis (km)	3786.8	8817.4	3663.6	3781.89
Eccentricity	0.00114	0.5756	0.0093	0.0069
Pericenter Distance (km)	3743.7	3741.9	3629.6	3755.8
Apocenter Distance (km)	3830.0	13892.9	3697.7	3808.0
Inclination (deg)	92.9	87.14	92.6	75.90
Period (hms)	1 hr 58 m	6 h 58 m 58 s	1 hr 52 m	1 h 57 m 55s
Local time of ascending node	6:11 AM	N/A	3:09 PM	N/A
Longitude of Ascending Node	357.5°	N/A	132.1°	N/A
Argument of Periapsis (deg)	274.1	269.07	270.3	267.33

The radio frequency (RF) proximity services are in the ultra-high frequency (UHF) band. The UHF bands specified for use in Consultative Committee for Space Data Systems (CCSDS) Proximity-1 are shown in Figure 2-5. The recommended frequencies lie within two 15-MHz sub-bands: 390 to 405 MHz and 435 to 450 MHz, separated by a 30-MHz guard band. In full-duplex operations, the lower band is nominally used for the return-link, while the upper band is used for the forward-link. UHF radio and antenna elements are generally tuned to optimize performance in both bands.[4] Half-duplex mode is part of the CCSDS standard but is not supported for proximity communications by any of the MRN orbiters.[5] Forward- and return-link frequencies may be related coherently or non-coherently. Proximity-1 also specifies forward- and return-link channel assignments including channels reserved for use as forward- and return-link frequency pairs.

[4] The MRO and ODY UHF antennas have roughly 2 dB more loss in the nominal return-link band (401.6 MHz) compared to the nominal forward-link band (437.1 MHz). These antennas were designed by Litton Amecom originally for use on the Space Shuttle (410-420 MHz) and was later repurposed for the Mars Surveyor ’98 mission, where the antenna was tuned to favor the forward-link band.

[5] The MRO and TGO orbiters use half-duplex overlay (HDO) mode for the open loop recording mode and for bit error rate (BER) tests.

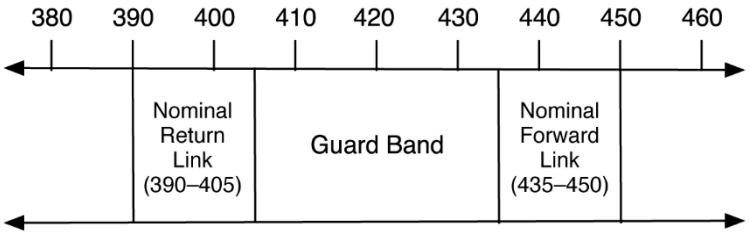

Figure 2-5: Proximity-1 UHF Bands, MHz

An overview of the communication services for relay proximity link of Mars Network is provided in Table 2-4.

Table 2-4: Mars relay orbiter RF characteristics.

Orbiter →	ODY	MEX	MRO	TGO
General				
Radio	C/TT-505[6]	Mars Express Lander Communications (MELACOM)	Electra	Electra
Antenna Type	Quadrifilar helix Low gain antenna (LGA)	Patch (1 rx and 1 tx)	Quadrifilar helix LGA	Quadrifilar helix LGA
Antenna Pointing	Relay: 17° off Nadir in aft direction	Nadir, user pointed	Nadir plus S/C roll options up to ± 30°	Nadir pointed
Link Operating Modes	Full-duplex (F), Simplex (S)	F, S	F, HDO[7], S	F, HDO[7], S
Forward-Link				
Frequency, MHz	437.1 (F, S)	437.1 (F, S)	435–450 (F), 390–450 (S)	435–450 (F), 390–450 (S)
Data Rates, kilobit(s) per second (kbps)	8, 32,128, 256	2, 8	1 to 2048 (mod 2 steps)	1 to 2048 (mod 2 steps)
Modulation	Residual Carrier; FSK	Residual Carrier, BPSK	Residual Carrier and Suppressed Carrier, BPSK	Residual Carrier and Suppressed Carrier, BPSK
Transmit Carrier Only	Yes	Yes	No	No
Coding	None	None	None (bypass); Convolution K=7, R=1/2	None (bypass); Convolution K=7, R=1/2; LDPC R=1/2, k=1024
RF Transmit Power	12 W	5 W	Full-duplex: 5 W Half-duplex: 7 W	Full-duplex: 5 W Half-duplex: 7 W
Return-Link				
Frequency, MHz	401.585625 (F, S)	401.585625 (F, S)	390–405 (F), 390–450 (S)	390–405 (F), 390–450 (S)

[6] In Release 2.1 of this Handbook, the Odyssey UHF radio was called CE-505 by manufacturer Cincinnati Electronics. The radio is now called the C/TT-505 by manufacturer L3Harris. C/TT-505 will be used going forward.

[7] HDO mode for open loop recording only during link operation.

Table 2-4: Mars relay orbiter RF characteristics.

Orbiter →	ODY	MEX	MRO	TGO
Data Rates, kbps	8, 32, 128, 256	2, 4, 8, 16, 32, 64, 128	1 to 2048 (mod 2 steps)	1 to 2048 (mod 2 steps)
Adaptive Data Rate	No	No	Yes	Yes
Modulation	Residual Carrier; FSK	Residual Carrier, BPSK	Residual Carrier and Suppressed Carrier, BPSK	Residual Carrier and Suppressed Carrier, BPSK
Decoding	None (bypass); Convolution K=7, R=1/2	Convolution K=7, R=1/2	None (bypass); Convolution K=7, R=1/2	None (bypass); Convolution K=7, R=1/2 LDPC

The oscillator stability for various orbiters of the MRN is provided in Table 2-5.

Table 2-5: Oscillator stability and Doppler data accuracy due to oscillator noise.

Orbiter →	ODY	MEX	MRO	TGO
Radio	C/TT-505	MELACOM	Electra	Electra
Oscillator	Sufficiently Stable	OCXO	Ext USO	TCXO
Orb Oscillator Stability, s/s	10^{-11}	10^{-9}	5×10^{-13}	5×10^{-6}
Measurement Interval, s	5	10–100	20	20

Table 2-6 provides an overview on the open loop recording support that is provided by the various relay orbiters.

Table 2-6: Open Loop Recording sampling characteristics.

Orbiter →	ODY	MEX	MRO	TGO
Radio	C/TT-505	MELACOM	Electra	Electra
Sample Rate (ksps)	83.592593	42.096	≤150	≤128
Bits/sample	1	1	1–8	1–8
Sampling Method	Real	Real	Complex (Quadrature)	Complex (Quadrature)

2.3 SUMMARY OF END-TO-END SERVICES AND PROTOCOL STANDARDS

The MRN offers end-to-end communication services to the user missions through a set of protocols that standardize the processing and communications procedure between the relay orbiters and user spacecraft. For ease of discussion, the Open System Interconnect (OSI) conceptual framework, as shown in Figure 2-6, is used to describe the relationship between the MRN and its user missions. A service provider network, such as the MRN, exposes a service access point (SAP) at the edge of the network via an agreed user-network interface that allows the exchange of data between the users and the service provider. The Service Data Unit (SDU) is the data unit that the network receives from the user across the user-network interface as well as the data unit delivered by the network back to the user. The network transports the received

SDUs from edge to edge, agnostic to the content and data structure within the SDUs. The Protocol Data Unit (PDU) is the internal data unit utilized by the network to transport the SDUs from edge to edge.

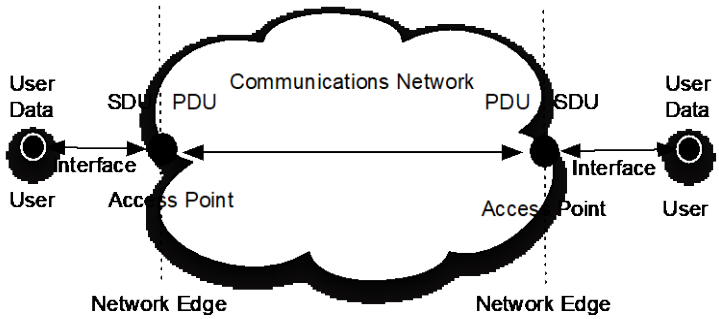

Figure 2-6: Data units and interfaces for service provider and its users.

In Transmission Control Protocol/Internet Protocol (TCP/IP) networks, an application (user) can send its data across the network reliably. The user's data could be bit-stream or formatted data blocks understood by the end applications. The interface to the TCP/IP network is the socket Application Programming Interface (API) that moves data from the application to the TCP/IP network as bit-stream, which is the SDU. Once inside the network, the bit-stream (SDU) is then re-packaged into IP packets (PDUs) and moved across the network. Retransmission and reordering of IP packets at the receiving edge of the network ensure reliable reconstruction of the bit-stream, which is then delivered back to the end application via the socket API as bit-stream. The same conceptual frame can also be applied to the MRN, as shown in Figure 2-7.

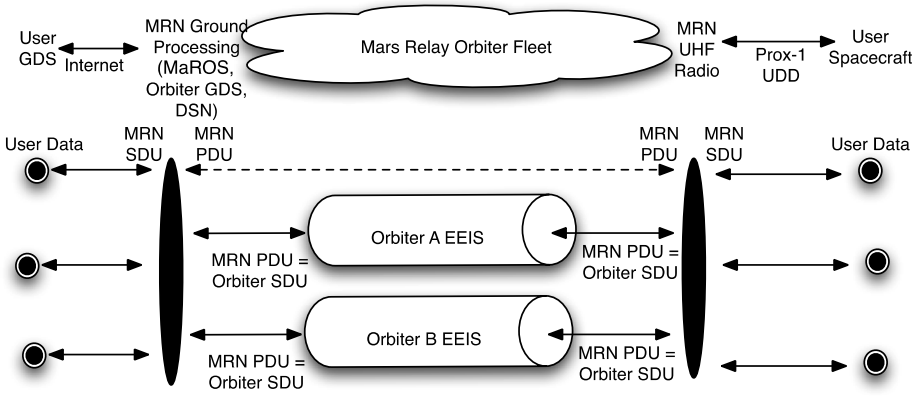

Figure 2-7: Data units and interfaces of the MRN.

User spacecraft send and receive SDUs to and from relay orbiters via the Proximity-1 user-defined data (UDD) services using the UHF radios. On the ground, the user mission GDSs exchange SDUs with MaROS and individual orbiter GDSs through terrestrial networking infrastructure. After applying the appropriate formatting structure, the SDUs are converted to MRN PDUs, which are delivered to the lander projects. Each orbiter EEIS treats the MRN PDUs as the orbiter's SDUs and converts them into orbiter-specific PDUs as they are moved between Mars and Earth. Due to the distributed and evolutionary nature of the MRN, the SDUs and

PDUs vary depending on the orbiter's EEIS design and their UHF radio capabilities. Table 2-7 and Table 2-8 summarize the data units, protocols, and interfaces for each relay orbiter.

Table 2-7: Summary of return-link telemetry services.

Orbiter →	ODY	MEX	MRO	TGO
Space Segment Payload (SSP)	C/TT-505	MELACOM	Electra	Electra
Space Segment Interface	CCSDS Proximity-1 compatible[8]	CCSDS Proximity-1 UDD Service[9]	CCSDS Proximity-1 UDD Service	CCSDS Proximity-1 UDD Service
MRN SDU (Relay Product)	(1) User Telemetry, (2) Doppler, (3) Canister	(1) User Telemetry, (2) Doppler, (3) Canister	(1) User Telemetry, (2) Doppler, (3) Timing, (4) Open loop Recording	(1) User Telemetry, (2) Doppler, (3) Timing, (4) Open loop Recording
MRN PDU (Orbiter SDU)	Unformatted Relay Products	Unformatted Relay Products	Pass Product: a file that contains individual CFDP-formatted relay products	Pass Product: a file that contains individual CFDP-formatted relay products
Orbiter PDU	Space Packet	Space Packet/ PUS	CFDP	Space Packet/PUS
Ground Segment SAP	ODY GDS (via DSN[10])	ESOC (via ESTRACK and DSN)	MRO GDS (via DSN[10])	ESOC (via ESTRACK, Roscosmos, and DSN)
Ground Segment Interface[11]	Internet Protocol	FTP	Internet Protocol	Internet Protocol

In terrestrial communication networks, the end users typically do not take an interest in the physical layer characteristics of the network's links; trouble-shooting and operational improvements are typically the responsibilities of the network provider. However, for Mars exploration, the user missions have a vested interest in gaining insight into how to optimize their operation and science return through link performance and radio telemetry records for each relay session. Furthermore, radiometric and timing data are optionally provided by MRN to support Mars local position and orbiter determination and time correlation. While each orbiter can produce various relay products, not all relay products can be supported simultaneously. For example, MRN orbiters that support open loop recording cannot simultaneously support reliable or unreliable Proximity-1 relay, or the collection of Phase/Doppler samples.

ODY carries the C/TT-505 UHF radio that implemented a draft version of what later became the CCSDS Proximity-1 Protocols suite. Three types of relay products (MRN SDUs) can be generated from any given relay session: telemetry, Doppler data, and open loop recording (referred to in Section 3.1 ODY and Section 3.2 MEX as "canister mode" data). These are sent back to Earth inside ODY data packets. MEX provides additional relay coverage to Mars surface missions. A file transfer protocol (FTP) interface facilitates telemetry flows and

[8] The C/TT-505 implementation is compatible with the CCSDS Proximity-1 UDD service under a restricted configuration; however, the standard was not yet in blue book status at the time of implementation.

[9] MEX also supports Packet Service, but this is not used by NASA missions.

[10] Since the orbiter GDS utilizes DSN services for most of its ground processing and delivery of data to the landed mission's GDS, from a service execution point of view, the SAP is the DSN.

[11] A user mission must develop its own interface with each orbiter project through the respective Relay Orbiter ICDs. MRN's return telemetry service does not define a common interface across all user-relay orbiter pairings.

command flows between user mission GDS and MEX via the European Relay Coordination Office (ERCO).

Later, with MRO and the introduction of the Electra radio, additional processing is introduced to the MRN SDUs. Each relay product (MRN SDU) is first formatted as CFDP PDUs for improved accountability and then aggregated into a single pass product (MRN PDU). This pass product is then handed to MRO for transfer to the ground. By using a single-pass product, MRO onboard processing is simplified, as it is not required to distinguish among different types of relay products. However, since MRO itself uses CFDP, this creates a rather complex chain of processing whereby CFDP is applied twice: first on the relay products by the Electra radio and then on the pass product by MRO. However, such internal complexity remains transparent to the users who receive their relay products from the MRO GDS via a terrestrial network interface. The notion of a pass product, in the context of this handbook, refers generally to the collection of data processed by Electra at the end of a relay session, not to the double CFDP-formatted file created by MRO.

For TGO, the orbiter EEIS applies a packet-oriented transport instead of CFDP. However, the Electra radio internally packages relay products as CFDP products. Regardless, the MRN architecture hides most of the internal details of the data transfer from the users through a set of standardized interfaces and services that remains consistent as relay assets are added and retired from the MRN fleet.

Table 2-8 shows the interface and data units for the forward-link command service. With MaROS, the forward-link command service interface and data flow have become greatly simplified. Unlike return-link telemetry service, where the interface to each orbiter GDS is unique, a user only needs to build a single interface to MaROS regardless of which orbiter will eventually forward the command to its spacecraft. MaROS performs the critical role of staging a command product and overseeing its release to the orbiter GDS, where it is packaged and otherwise prepared for uplink to the orbiter prior to a designated relay session. MaROS acts as a single SAP for all MRN forward-link command service instances.[12]

Table 2-8: Summary of forward-link commanding services.

Orbiter →	ODY	MEX	MRO	TGO
SSP	C/TT-505	MELACOM	Electra	Electra
Space Segment Interface	CCSDS Proximity-1 compatible	CCSDS Proximity-1 UDD Service	CCSDS Proximity-1 UDD Service	CCSDS Proximity-1 UDD Service
MRN SDU	User command file	User command file	User command file	User command file
MRN PDU	ODY uplink product	MEX uplink product	MRO uplink product	TGO uplink product
Orbiter GDS PDU	CLTU	CLTU	CLTU	CLTU
Ground Segment SAP	MaROS	MaROS	MaROS	MaROS
Ground Segment Interface	Secure FTP	Secure FTP	Secure FTP	Secure FTP

Protocols are the agreed-upon methods of data transmission, and standardized protocols are important for achieving efficient management and interoperability of relay

[12] Though not the current implementation, further simplification of the ground interface is achievable by using existing MaROS capabilities as a single intermediary for delivering return-link data from all orbiter GDSs and the DSN to all user missions.

communications. The MRN and its fleet of orbiters operate based on standardized protocols. Terrestrial network protocols are often depicted as a layered stack as shown in Table 2-9, where each layer represents a different level of functional abstractions. Layer 1 and Layer 2 are concerned primarily with single hop communication over specific physical medium, Layer 4 and above are end-to-end data handling processes. Layer 3 performs both hop-by-hop as well as end-to-end networking functions. Layers 5 and 6 generally are not applicable to Mars Network communications. The protocols employed by the existing and planned relay orbiters are indicated in Table 2-9. All mission-specific processing, procedures, and formatting rules are omitted from this table, which is only concerned with open standards.

Table 2-9: Communication protocol standards of Mars orbiters.

Layer	Domain or Functionality	ODY	MEX	MRO	TGO
7 Application	Data products, messages, commands				
6 Presentation	N/A	N/A	N/A	N/A	N/A
5 Session	N/A	N/A	N/A	N/A	N/A
4 Transport	End-to-end transfer, error correction and mitigation		PUS	CFDP[13]	PUS
3 Network	Addressing, Multiplexing, and Routing	Space Packet	Space Packet	Space Packet	Space Packet
2 Data Link	• Relay and deep-space link establishment • Time correlation • Transfer frame processing • Retransmission and forward error correction (FEC) • Radiometric data extraction	• Proximity-1 (space link, coding and synchroniza-tion) • TM/TC • (Deep-Space Link)	• Proximity-1 (space link, coding and synchroniza-tion) • TM/TC • (Deep-Space link)	• Proximity-1 (space link, coding and synchroniza-tion) • AOS/TC • (Deep-Space link)	• Proximity-1 (space link, coding and synchroniza-tion) • TM/TC[14] • (Deep-Space link)
1 Physical	RF characteristics	• Proximity-1 (physical) • CCSDS Radio Frequency and Modulation System Standards	• Proximity-1 (physical) • CCSDS Radio Frequency and Modulation System Standards	• Proximity-1 (physical) • CCSDS Radio Frequency and Modulation System Standards	• Proximity-1 (physical) • CCSDS Radio Frequency and Modulation System Standards

The key interface for the MRN, the UHF relay link, uses the Proximity-1 Space Link Protocol suite specifically developed through CCSDS to address the relay link interoperability issue. The CFDP provides end-to-end accounting and delivery of relay products as well as science products, as does the Packet Utilization Standard (PUS). In addition to the protocols for the relay link and relay product transport, there are CCSDS protocols for the deep-space links;

[13] MRO's CFDP implementation provides end-to-end detection of errors and data loss but does not execute retransmission. Rather, any retransmission is managed at the data link layer via AOS frame retransmissions.

[14] For TGO and MEX, TM has older protocol CCSDS 132.0-B-1 associated with it, and TC has older protocol 231.0-B-1.

these are the Space Packet Protocol, Packet Telemetry (TM), Telecommand (TC), and Advanced Orbiting Systems (AOS) Space Data Link protocols.

2.3.1 *Proximity-1 Protocol*

The CCSDS Proximity-1 Space Link Protocol was developed specifically for short range, bi-directional, fixed or mobile radio links, generally used to communicate among aerobots, landers, rovers, orbiting constellations, and orbiting relays. It is not limited to operations at Mars and is currently being adapted to Lunar applications.[15]

The latest version of the Proximity-1 Space Link Protocol is described in four CCSDS documents:

- Data Link Layer: CCSDS 211.0-B-6 (Blue Book, Jul 2020)
- Physical Layer: CCSDS 211.1-B-4 (Blue Book, Dec 2013)
- Coding & Synchronization Sublayer: CCSDS 211.2-B-3 (Blue Book, Oct 2019)
- Rationale, Architecture, and Scenario: CCSDS 210.0-G-2 (Green Book, Dec 2013)

The Proximity-1 protocol controls and manages data interchange across the communications link. The data link layer and physical layer protocols provide the capability to send user data, control reports, and control directives between the transceiver units. The directives are used for selection of communications frequencies, data rates, modulation, coding, and link directionality (full-duplex, half-duplex, and simplex operation). The data link layer provides for the transfer of both packets and UDD units.

Key attributes of the Proximity-1 protocol include:

- Bi-directional handling of both forward- and return-links
- Support of full-duplex, half-duplex, and simplex links
- Transfer of both control information, such as directives of messages, and data such as telemetry, commands, radiometrics, or time data
- Transfer of packets, directives, or UDD units
- Provision for coupled non-coherent ranging and timing services
- Maximization of data-driven methods
- Support of coded or uncoded operations
- Asynchronous operation (variable length frames)

The MRN relay orbiters do not implement all protocol features. For example, half-duplex mode and packets mode are not supported on the NASA orbiters. Protocol non-compliances will be discussed subsequently.

[15] *Space Communications Session Control*: CCSDS 235.1-W-04 (White Book, Jan 2025).

The CCSDS Data Link Layer Recommendation specifies the following directives (set transmit parameters and set receive parameters, respectively), which determine the various modes of operation:

Table 2-10: Proximity-1 directives.

Mode	Set Transmit Parameters	Set Receive Parameters	Reliable
Standby	✓	✓	
Sequence-Controlled	✓	✓	✓
Expedited	✓	✓	×
Bitstream[16]	✓	✓	×
Tone Beacon	✓	✓	×
Canister	✓	×	×

The key data transfer modes are *Sequence Controlled*, *Expedited*, and *Bitstream*. These modes are elaborated as follows:

- Sequence-Controlled mode uses a Go-Back-N Automatic Repeat Request (ARQ) protocol between the relay radios on both ends of the link to ensure reliable delivery of packets on order. Sequence-controlled mode requires a full-duplex link or a half-duplex link.

- Expedited (also known as Message Bypass) mode transmits packets from one radio to another radio without acknowledgment. As such, it is an unreliable mode. Data are transferred in Proximity-1 frames, with a 32-bit cyclic redundancy check (CRC), but the Quality of Service flag is set so that a sequence check and spacecraft ID are not required at the receiver. Upon reception of a message bypass frame, the receiver simply performs a CRC check of the received frame and (if the check passes) outputs the content of the data field to the C&DH; if the CRC fails, the frame is discarded. CFDP can be used at the application layer to ensure reliable delivery with expedited service if a forward-link is available. Expedited mode requires either a full-duplex, half-duplex, or simplex link.

- Bitstream mode is an unreliable mode where raw bits are transmitted from one radio and are received by another radio without Proximity-1 framing and without acknowledgement (or any other form of sequence control). This mode is customarily used during EDL in tandem with open loop recording. Bitstream mode requires only a simplex link (but can also be supported in a full-duplex or half-duplex link)

In *Tone Beacon mode*, the transceiver is configured to transmit an unmodulated carrier (CW signal). This mode nominally supports four orbiter frequencies (437.1000 MHz, 440.7425 MHz, 444.3850 MHz, and 448.0275 MHz) and one lander frequency (401.585625). Tone Beacon mode was originally devised as a form of simple tone communication between

[16] Bitstream mode is specified in Annex F: *NASA Mars Surveyor Project 2001 Odyssey Orbiter Proximity Space Link Capabilities.* Bitstream mode is technically not part of the normative CCSDS Data Link Layer Recommendation, but because this mode has been adopted in NASA Mars proximity communications, it is listed for informational purposes.

microprobes (or small spacecraft). Tone Beacon mode can also be used to perform Doppler measurements, where the orbiter transmits at 437.1 MHz and the lander (or other orbiter in a cross-link connection) coherently transponds with the CW tone of 401.585625 MHz. Tone Beacon mode requires only a simplex link (but can also be supported in a full-duplex or half-duplex link)

Canister mode is a type of legacy open loop recording (Canister mode has largely been superseded by the open loop recording feature of Electra transceivers, and as such is only supported by ODY and MEX). In Canister mode, the Odyssey C/TT-505 creates an open loop sampling of the incoming baseband signal at a rate of 83.6 kHz and with a 1-bit analog-to-digital (A/D) conversion. The center frequency of the open loop recording is always at the nominal 401.585625 MHz receive-center frequency. No other sample rates or A/D conversion bit widths are possible. Due to Odyssey flight software constraints, the precision of the time-stamp is 20 ms. The Canister mode data are put in fixed-length packets, like the Doppler data packets, but with the raw RF data replacing the Doppler counter data. Cannister mode requires only a simplex link (but can also be supported in a full-duplex or half-duplex link)

The foregoing modes are supported by various types of communication links. These are described as follows.

In full-duplex mode, the receiver and transmitter operate concurrently during a communications session. Since proximity communication equipment typically employs a single UHF antenna for transmit and receive, this requires the use of a diplexer (essentially a filter) to separate the transmit and receive signals. The Electra transponder supports three forms of full-duplex communication:

- Forward and Return (provider data sent on forward-link and user data sent on return-link);
- Return Only (user data sent on return-link)
- Forward Only (provider data sent on forward-link)

In each of these forms, commands and acknowledgements are exchanged on the forward- and return-links.

In half-duplex mode, operation switches between receiving and transmitting within a communications session, with only the receiver or transmitter enabled at one time. The chief advantage of this mode of operation is that the diplexer can be bypassed (or omitted from the design), reducing loss in the signal path. None of the MRN orbiters support half-duplex sequence-controlled (reliable) communication. However, the Electra radio features a half-duplex overlay[17], which allows the diplexer to be bypassed for simplex mode operation and for bit error rate testing.

In simplex mode, only the receiver or transmitter is operated during the session. This mode is typically used for (unreliable) Bitstream communication.

[17] Electra has the hardware necessary for half-duplex operation but not the software.

For reliable sequence-controlled communication, it is necessary to first establish a relay session through a hailing process. While the protocol is flexible as to who initiates the hailing process, in the MRN it is always the orbiter that hails. The lander radio must be separately sequenced to be powered on and listening for hail (the orbiter cannot configure the lander radio to listen for hail, or "wake it up"). Typically, there is a dedicated hailing channel (always 401.485625 MHz for MRN orbiters). Following acknowledgment of the hail by the lander, the orbiter will issue directives to configure the session, which can include switching to other channels (supported only by Electra transceivers). For adaptative data rate passes, the orbiter may issue directives to change data rate, depending on the channel signal-to-noise ratio. If the link drops, the orbiter waits for a prescribed period (usually a few seconds) and rehails.

The session is normally terminated by the orbiter radio going to standby. The lander radio may optionally choose to be actively listening for a short period following the termination of the session by the orbiter, but otherwise it is up to the lander's sequencing to close out the session from its perspective and to power down. The lander may optionally terminate the session by issuing the remote no more data (RNMD) directive to the orbiter. In practice, this is not done, as the lander always has a sufficiently large transmit buffer to exceed the duration of the session (which is terminated by the orbiter).

In off-nominal circumstances where a hail is not acknowledged, a session can terminate by exceeding the maximum number of consecutive re-hailing failures. This duration, called the hail lifetime, is set to 120 hail cycles, each about 12 seconds. The hail lifetime is about 24 minutes.

Unreliable modes, namely Expedited mode and Bitstream mode, do not require a hailing process. They do require sequencing in the respective spacecraft to initiate transmission and reception as well to terminate the respective sessions, since there are no commands (and therefore no directives) or acknowledgements.

2.3.1.1 Adaptive Data Rate Mode

Although not a standard Proximity-1 service, the Adaptive Data Rate (ADR) mode in the Electra UHF Transceiver (EUT) carried by MRO and TGO orbiters is enabled using Proximity-1's Communications Change (CC) directive to achieve significant improvement in link capacity.

The Proximity-1 standard supports a CC directive during a communications session, which allows either the orbiter or the landed spacecraft to propose and accept basic changes to the transmitter or receiver parameters including symbol rates, frequency channels, symbol coding, and others that affect the performance of the communications channels when conditions change. This feature is used during the hailing process, which is typically initiated by the orbiter, to command the transmit and receive configuration of the responder (typically the lander) to establish a relay session. Because the protocol is peer-symmetric, both orbiter and lander may in principle initiate a CC request, but for the Electra orbiters the lander always responds to CC requests from the orbiter.

The ADR mode, as implemented in the EUT, operates concurrently with the normal Proximity-1 protocol and determines when a CC activity should be initiated. In particular, the orbiter EUT's received symbol signal-to-noise ratio (SSNR) is used to determine if the surface-to-orbit communications link can support a change in data rate depending on its value relative to a set of thresholds, described as follows:

For an upward change in data rate

$$N_{up} = \lfloor (SSNR - Threshold_{high})/STEP \rfloor + 1,$$

where N_{up} is the number of upward data rate steps (data rate increases by a factor of $2^{N_{up}}$), $Threshold_{high}$ is the ADR high transition threshold (normally 7 dB) and $STEP$ is the ADR SNR step ratio (normally 10 dB). $\lfloor () \rfloor$ denotes rounding down to the nearest integer.

In this formulation, data rate will increase by one step (i.e., double) for $7\ dB \leq SSNR < 17\ dB$ and two steps (i.e., quadruple) for $SSNR \geq 17\ dB$. Two-step increases are infrequent, except sometimes at the start of a pass or after a rehail in the middle of a pass.

For a downward change in data rate

$$N_{down} = \begin{cases} 1 & Threshold_{deep} < SSNR \leq Threshold_{low} \\ 2 & SSNR \leq Threshold_{deep} \end{cases},$$

where $Threshold_{low}$ is the ADR low transition threshold (normally 3 dB) and $Threshold_{deep}$ is the ADR deep transition threshold (normally 7 dB).

Given the foregoing, the ADR algorithm adjusts data rate (within allowable minimum and maximum) so that $SSNR$ is between 3 dB and 7 dB – 5 dB on average – by adjusting the rate by ± 1 step for the most part and sometimes by ± 2 steps.[18] Nominal ADR thresholds and other settings are provided in Appendix B.

The receiver of the CC request executes the request as a standard Proximity-1 request and is not required to implement an ADR algorithm of its own. The ADR implementation requires a radio that supports the CCSDS Proximity-1 Recommendation, CCSDS 211.0-B6. It cannot be used with the C/TT-505 class of UHF transceivers without extensive modifications to these transceivers.

2.3.1.2 Adaptive Data Rates for Low Density Parity Check (LDPC) Coding

With the introduction of LDPC coding in late 2020, it was necessary to adjust adaptive data thresholds for both convolutional coding and LDPC coding. As mentioned, the nominal low and high ADR thresholds for convolutional coding are 3 dB and 7 dB, respectively, averaging to 5 dB. Since LDPC has 3 dB coding gain over convolutional coding, the corresponding LDPC thresholds would need to be 0 dB and 4 dB (averaging to 2 dB). However, the SSNR estimator is non-linear in the region between 0 dB and ~1.5 dB and using the estimator in this region would result in improper rate transitions. To circumvent this non-linearity, the SSNR estimator in LDPC-enabled radios is biased by 3 dB, so that the low and high thresholds for convolutional coding are now 6 dB and 10 dB (respectively), and the thresholds for LDPC coding are 3 dB and 7 dB (respectively).[19] The ADR thresholds for MRO, which only supports convolutional

[18] An $N_{up} = 3$ change is possible theoretically but would require an $SSNR$ of 27 dB, which exceeds the dynamic range of the estimator.

[19] N. Chamberlain, et. al., *Implementing Low-density Parity-Check Codes in the Mars Relay Network,* 2022 AIAA/IEEE Aerospace Conference, Big Sky, MT, March 2022.

coding, remain as 3 dB and 7 dB. While in principle the ADR thresholds are user selectable, in practice they never deviate from the aforementioned values. Appendix B lists tables of nominal ADR thresholds and other settings.

2.3.1.3 Proximity-1 Implementation Compliance

Table 2-11 provides a summary of Proximity-1 capabilities across the MRN orbiter fleet. Changes in hardware and software capabilities, operational needs, and the continuing evolution of the protocol specifications affect the Proximity-1 implementation of a relay orbiter.

Table 2-11: Proxmity-1 and other capabilities of MRN orbiters.

Mode	PROX-1	ODY	MEX	MRO	TGO
Sequence-Controlled	YES	✓	✓	✓	✓
Expedited (Message Bypass)	YES	✓	✓	✓	✓
Bitstream	YES	✓	✓	✓	✓
Tone Beacon	YES	✓	✓	✗	✗
Canister (1-bit)	YES	✓	✓	✗	✗
Doppler 1-way	YES	✓	✓	✓	✓
Doppler 2-way (coherent turnaround)	YES	✓	✓	✓	✓
Timing Services	YES	✗	✗	✓	✓
Frequency Agility	YES	✗	✗	✓	✓
Bypass (No) Coding FWD	YES	✓	✓	✓	✓
Bypass (No) Coding RTN	YES	✓	✗	✓	✓
Convolutional Coding FWD	YES	✗	✗	✓	✓
Convolutional Coding RTN	YES	✓	✓	✓	✓
LDPC Coding FWD	YES	✗	✗	✗	✗
LDPC Coding RTN	YES	✗	✗	✗	✓
FSK	YES	✓	✗	✗	✗
PSK Residual Carrier	YES	✓	✓	✓	✓
PSK Suppressed Carrier	YES	✗	✗	✓	✓
QPSK	YES	✗	✗	✗	✗
Full-Duplex Prox-1	YES	✓	✓	✓	✓
Half-Duplex Prox-1	YES	✗	✗	✗	✗
Simplex FWD	YES	✓	✓	✓	✓
Simplex RTN	YES	✓	✓	✓	✓
Open Loop Recording (8-bit)	NO	✗	✗	✓	✓
FWD – RTN Band Swap	NO	✗	✗	✓	✓
Adaptive Data Rates[20]	NO	✗	✗	✓	✓
Bit Error Rate Test	NO	✗	✗	✓	✓
Remote Software and Firmware Update	NO	✗	✗	✓	✓

[20] Adaptive data rates are not explicitly defined in the CCSDS standard documents, although the capability of commanding a rate change (as well as other link configuration parameters) is defined.

The Proximity-1 Implementation Compliance Sheet (PICS) more formally documents the commonality, customizations, and omitted features of each relay orbiter's implementation of the Proximity-1 protocol. The PICS is a standalone document that is now published separately from the handbook. Contact Roy Gladden (roy.e.gladden@jpl.nasa.gov) for information about the PICS.

2.3.1.3.1 *Convolutional Coding Non-Compliance*

The CCSDS Recommendation on Coding and Synchronization (211.2-B-3) specifies convolutional coding in a separate document:

- TM Synchronization and Channel Coding: CCSDS 131.0-B-5 (Blue Book, Sep 2023)

Section 3 of the CCSDS document discusses convolutional coding and requirements for data randomization. It is noted that

> "*An inverter is specified with the basic convolutional code to assure sufficient bit transitions to keep receiver symbol synchronizers in lock, when used with Binary Phase Shift Keying (BPSK) modulation. Sufficient bit transitions cannot be guaranteed by the inverter alone if some multiplexing schemes are used, e.g., with Quadrature Phase Shift Keying (QPSK) modulation, or if a punctured convolutional code is used. There are also data patterns for which convolutional code synchronization cannot be determined. The pseudo-randomizer is also used to aid signal acquisition and to mitigate spectral lines in the transmitted signal*."

Relay orbiters equipped with an EUT or C/TT-505 radio rely on a pseudo-randomizer to ensure sufficient symbol transitions to facilitate symbol lock and therefore do not normally invert the output of the G2 path when communicating with NASA landers (which are also equipped with pseudo-randomizers). MRO, and TGO can optionally invert the G2 path for communication with landers that are not equipped with pseudo-randomizers).[21] A summary of G2 inversion support is provided in Table 2-12.

Table 2-12: G2 Inversion support.

Mode	ODY	MEX	MRO	TGO
G2 Inverted FWD	✖	✖	✓	✓
G2 Inverted RTN	✖	✓	✓	✓
G2 Non-Inverted FWD	✓	✖	✓	✓
G2 Non-Inverted RTN	✓	✖	✓	✓

Since ODY only supports transmission and reception of non-inverted G2 convolutional data, it cannot support communication with landers that rely on G2 inversion.

[21] In the past, ESA lander radios have not been equipped with pseudo-randomizers and have relied on G2 inversion for symbol transition density.

2.3.2 *Reference Documents*

Space Communications Session Control: CCSDS 235.1-W-04 (White Book, Jan 2025).

N. Chamberlain, et. al., *Implementing Low-density Parity-Check Codes in the Mars Relay Network,* 2022 AIAA/IEEE Aerospace Conference, Big Sky, MT, March 2022.

2.3.3 *CCSDS File Delivery Protocol*

The CFDP is an application-layer protocol that provides flexible end-to-end delivery of data products such as files. Files can be transferred reliably, with automatic retransmission in the event of errors, or unreliably on a “best efforts” basis.

CFDP is described in three CCSDS documents:

- Recommendations: CCSDS 727.0-B-5 (Blue Book, July 2020)
- Introduction and Overview: CCSDS 720.1-G-4 (Green Book, May 2021)
- Implementers Guide: CCSDS 720.2-G-4 (Green Book, May 2021)

2.3.4 *Space Packet Protocol*

The Space Packet Protocol is a network layer protocol supporting the transmission and routing of processed data from source application to destination. Multiple sources can be distinguished and routed onto different communication and processing paths. Terrestrial IPv4 and IPv6 packets, as well as other higher layer data units, can be encapsulated into Space Packets for transfer across a space data system. The Space Packet Protocol is specified in CCSDS 133.0-B-2 (Blue Book).

2.3.5 *Deep Space Data Link Protocols*

There are three deep space CCSDS protocols for sending data over a single space link:

- TM Space Data Link Protocol: CCSDS 132.0-B-3 (Blue Book, October 2021)
- Telecommand (TC) Space Data Link Protocol: CCSDS 232.0-B-3 (Blue Book, September 2015)
- Advanced Orbiting Systems (AOS) Space Data Link Protocol: CCSDS 732.0-B-4 (Blue Book, October 2021)

The TM Space Data Link Protocol is used for sending telemetry from a spacecraft to a ground station (return-link). The TC Space Data Link Protocol is used for sending commands from a ground station to a spacecraft (forward-link).

The AOS is an added service for transmitting various types of online data (such as audio or video) to the Packet Telemetry standard services. It uses the same packet structure as the Packet Telemetry standard, except the frame format is slightly different. The AOS Space Data Link Protocol may be used on only the return-link, or on both forward- and return-links between a spacecraft and the ground.

3 MARS RELAY NETWORK SERVICES AND INTERFACES

3.1 MARS ODYSSEY

3.1.1 *Overview*

Launched in April 2001, the Odyssey spacecraft entered Mars orbit in October of that same year, then began science operations in February 2002, and is the longest-operating spacecraft at Mars as of 2026. In addition to its ongoing science operations, the ODY spacecraft performed as a relay service provider for the two Mars Exploration Rover (MER) rovers, Spirit and Opportunity, which arrived at Mars in January 2004 and ended their missions in 2010 and 2018, respectively. It also provided relay services for the Phoenix lander in the summer of 2008. Odyssey began primary relay services for the Mars Science Laboratory Curiosity rover in 2012, the InSight lander in late 2018, and the Mars 2020 Perseverance rover in February 2021.



Figure 3-1: Mars Odyssey.

Beginning in August 2004, NASA has approved two-year-duration extended missions for the Odyssey spacecraft beyond its original mission lifetime. Satisfying the needs of both the science mission and the relay mission, the Odyssey spacecraft is in a near-circular, near-polar orbit about Mars with an orbit period of less than two hours.

Relay services are provided by a radio and antenna operating in the ultra-high frequency (UHF) 400-MHz band. The C/TT-505 UHF radio can perform largely independently of the other science instruments on board the orbiter. The UHF radio antenna is mounted on the nadir deck, which is held with a 17° pitch behind nadir during normal operations.

ODY operates in a Sun-synchronous, near-circular orbit, with an inclination of approximately 93° and an altitude of 390–454 km. The Local Mean Solar Time (LMST) of the ascending node is roughly 6:11 AM. Mean Keplerian orbit elements for the ODY spacecraft, at the epoch of 29-JAN-2026, are presented in Table 3-1. Please note that the orbital parameters in Table 3-1 are subject to change as the mission continues to adjust ODY's orbit in order to meet constraints and requirements such as power generation, propellant usage, and science and relay support.

Table 3-1: ODY orbital parameters.

Mission Information	
Launch	April 7, 2001
Mars Orbit Insertion (MOI)	October 24, 2001 (Universal Time Coordinated (UTC) date)
Aerobraking	January 11, 2002
Orbit Ops Commission Date	February 19, 2002 (Mapping Start)
End of Prime Mission	August 24, 2004
Orbit Information	**Odyssey Parameter Value (Mean)**
Periapsis Radius (km)	3743.7
Apoapsis Radius (km)	3830.0
Semi-major Axis (km)	3786.8
Eccentricity	0.00114
Inclination (deg)	92.9
Ascending Node (deg)	357.5
Argument of Periapsis (deg)	274.1
Time from Periapsis (sec)	3532.8
Epoch Spacecraft Event Time/Ephemeris Time (SCET/ET)	29-JAN-2026 00:00:00
Related Data	
Periapsis altitude / location	390 km / South pole
Apoapsis altitude / location	454 km / North pole
LMST, ascending node	6:11 AM
LMST, descending node	6:11 PM
Orbit period	1 hr 58 min

(Mean Keplerian orbit elements, Mars-centered, Mars mean equator and Earth mean equator, reference epoch J2000, IAU 1991 Coordinate System)

Odyssey's low-altitude orbit results in short geometric contacts, with average session durations of roughly 14 minutes during which the orbiter is visible above 10 deg from a given spot on the Martian surface. For low-latitude sites within 30 deg of the equator, a relay service

user spacecraft will typically have 2–4 contact opportunities each sol, clustered around the 6:11 AM and 6:11 PM nodal crossings. At higher latitudes, additional sessions will be available, up to a maximum of 12–13 sessions per sol for near-polar sites.

3.1.2 *Odyssey UHF Transceiver and Antenna*

3.1.2.1 Transceiver

The ODY UHF transceiver is compatible with the Consultative Committee for Space Data Systems (CCSDS) Proximity-1 Space Link Protocol. Figure 3-2 is a block diagram of the Odyssey UHF subsystem.

The transceivers and the sufficiently stable oscillators (SSO) are block redundant. However, there is no cross-strapping between the ODY command and data handling (C&DH) and the transceivers, and between the transceivers and the SSOs. A single antenna provides transmitting and receiving capability and a switch connects it to the active UHF radio.

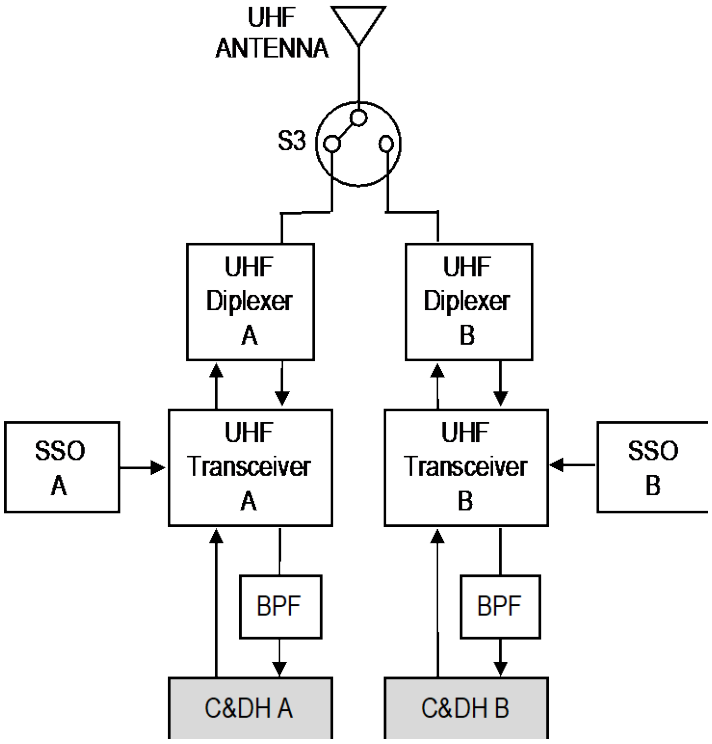

Figure 3-2: Block diagram of Odyssey UHF subsystem.

3.1.2.2 UHF Antenna

The ODY relay antenna is a quadrifilar helix.

Figure 3-3 and Figure 3-4 show ODY UHF antenna gain patterns. All pattern data are presented as right-hand circularly polarized (RCP) gain in units of dBic (decibels relative to an isotopic circularly polarized radiator). Pattern data are presented in a coordinate system looking down to Mars and oriented with spacecraft velocity vector pointing up-page, as though the spacecraft were flying south to north.

The color-scaled 2D patterns (presented in the downward looking coordinate system) represent the incident power distribution that would appear near the ground, as seen from orbiter, assuming the antenna were operating as a transmitting antenna. Viewing antenna pattern data in the native antenna coordinate system causes the patterns to flip left-to-right around the coordinate axis pointing in the velocity vector. In the 2D patterns, the global pattern maximum gain is indicated by a single boldface number.

The UHF flight antenna was measured on a spacecraft mockup without solar arrays. The 1D pattern cuts were obtained by computing statistics (minimum gain, maximum gain, average gain) over azimuth (rotation around boresight) on the 2D pattern data. The 3 dB beamwidth is computed as the average gain across all azimuth angles and represents the full beam at –3 dB from boresight. For ODY, the 3 dB beamwidth is 82 deg at 401 MHz and 104 deg at 437 MHz.

The antenna is not articulated, nor does the spacecraft execute Requested Off-Nadir Targeted Observation (ROTO) prior to or during a relay session. The ODY spacecraft nadir deck is pitched 17° behind nadir, opposite the direction of flight. The cant angle is the angle between the orbiter y-axis and the velocity vector. The UHF antenna boresight is along the –x axis. The antenna is pointed off-nadir by the cant angle. This fixed offset between nadir and the antenna boresight must be taken into account when using the ODY antenna patterns and when planning relay sessions.

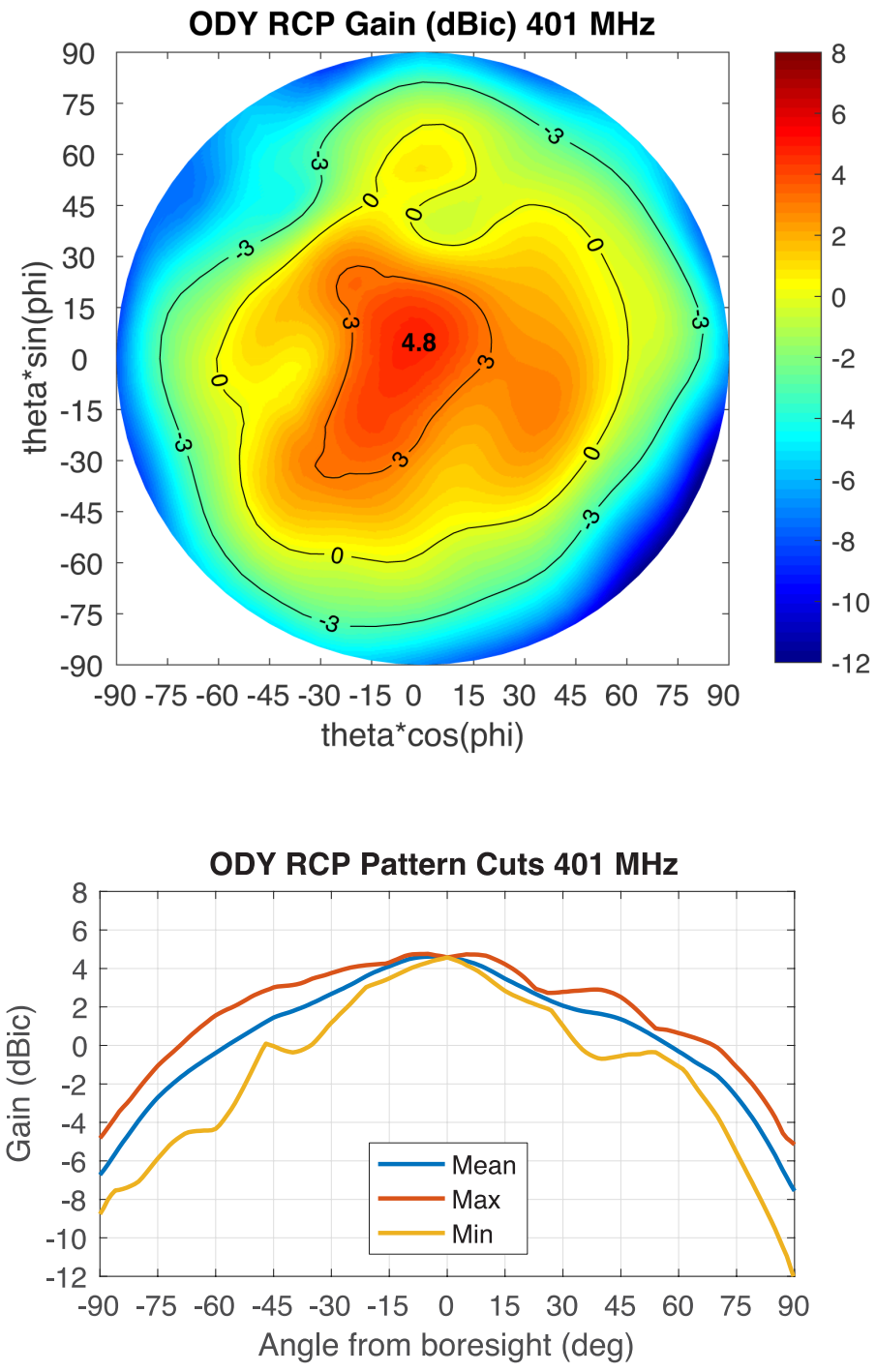

Figure 3-3: ODY UHF return-link patterns. *Upper:* 2D composite pattern. *Lower:* 1D pattern cuts.

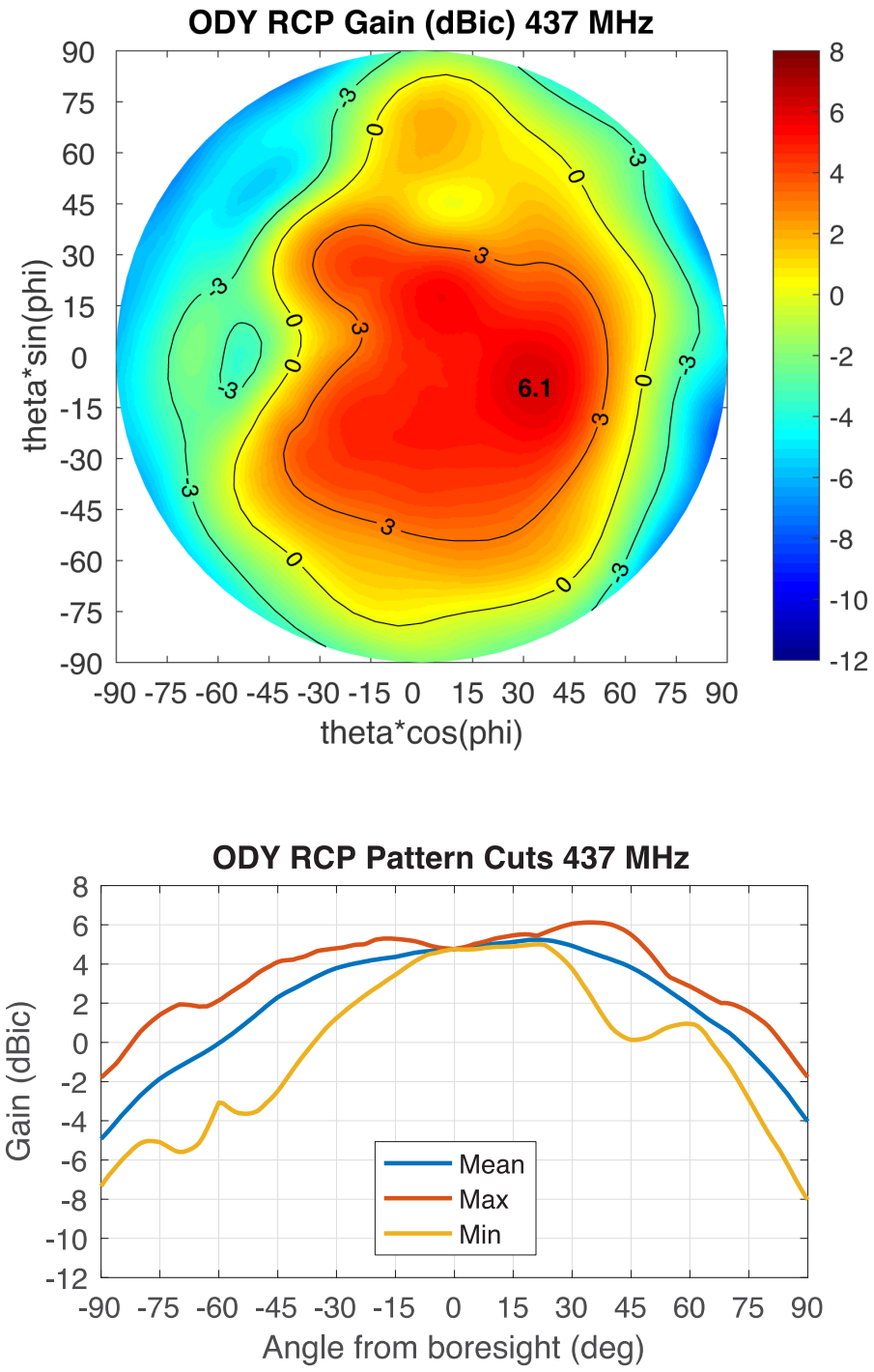

Figure 3-4: ODY UHF forward-link patterns. *Upper:* 2D composite pattern. *Lower:* 1D pattern cuts.

3.1.3 *Odyssey UHF Radio Frequency Services*

The ODY UHF Radio Frequency (RF) services include communication, navigation, and timing. Table 3-2 details the services.

Table 3-2: Summary of ODY RF services.

Key Functions	Parameters	Additional Notes
Communication Services		
Mode of Operation	Full-duplex	
	Half-duplex	This mode is not implemented
	Simplex	
Hailing Frequency	437.1 MHz	
Forward-Link Frequency	437.1 MHz	
Return-Link Frequency	401.585625 MHz	
Antenna Polarization	RCP	
Modulation	Pulse-code Modulation (PCM)-Bi-Phase-L (data) and Phase Modulation (PM) (carrier)	
	Residual Carrier with Modulation Index of 60° (1.05 radians)	
	Frequency shift keying non return to zero level (FSK NRZ-L)	Frequency shift key is not used in practice. Capability was originally intended for backwards compatibility with older spacecraft.
Coding	Convolutional Coding Rate ½ with constraint length 7, non-inverted G2	G2 not implemented per Proximity-1 spec, which specifies G2 to be inverted. Convolutional coding for return-link only.
	Convolutional Decoding with 3-bit soft quantization	Return-link only
	Option to bypass coding/decoding	The forward-link is always uncoded.
Forward-Link Data Rates	8 kilobits per second (kbps), 32 kbps, 128 kbps, 256 kbps	8 kbps and 32 kbps are used in flight due to limitations in flight software
Return-Link Data Rates	8 kbps, 32 kbps, 128 kbps, 256 kbps	
Additional Capabilities	FSK NRZ-L Modulation	Forward-Link Data Rate of 8 kbps uncoded. Return-Link Data Rate of 8 kbps, 128 kbps, uncoded
Navigation and Timing Services		
Navigation	1-way, 2-way Doppler	PSK only
Open Loop Recording	Open loop processing at received signal frequency of 401.585625 MHz with sampling at 83.6 kHz and baseband digitizing with 1-bit resolution	

Modes of Operation: The C/TT-505 transceiver operates in several modes including Reliable Bitstream, Message Bypass, Unreliable Bitstream, Doppler, Tone Beacon, and Canister modes. Both Reliable Bitstream mode and Message Bypass mode use the Version 3 transfer frame as defined by CCSDS Proximity-1 Space Link Protocol. The frame consists of 3-byte start sequence, 5 byte Proximity-1 header, variable length data field and 4 byte CRC. Odyssey Proximity-1 data services are an operational subset of those supported by the Electra orbiters (see Table 2-11).

Reliable Bitstream (Sequenced Controlled) Mode: This mode accepts a serial data bit stream and provides error free delivery of the bit stream at the receiving end. This mode is

implemented using a full duplex air link permitting data transmission with return acknowledgement. Serial data is encapsulated within a Proximity-1 formatted transfer frame. The transfer frame contains a sequence number permitting the receiving end to verify the frame is received in proper order. Error detection is accomplished by using a 32 bit CRC which is calculated over the frame and appended at the end. The receiving end verifies the CRC and frame sequence number. If checks pass, the data field of the Proximity-1 frame is output serially to the C&DH.

A Proximity Link Control Word (PLCW) is then returned acknowledging the frame to the transmitter. If errors are detected the frame is discarded and a PLCW will be returned without incrementing next expected sequence number. The transmitting end then retransmits frames starting at the sequence number indicated in PLCW. Reliable bit stream utilizes a fixed Go-Back-2 protocol, which permits transmission of the next sequenced frame while receiving a PLCW for the previously transmitted frame. This permits almost continuous data transmission assuming adequate link margin and is optimized for transmission with a second C/TT-505 lander radio. By contrast, the Electra radio data frame size and Go-Back-N values can be user-set to accommodate efficient operations with a C/TT-505 radio. Thus, an Electra-equipped lander can be tuned to efficiently interoperate with the C/TT-505-based Odyssey orbiter.

Reliable bitstream operates in full duplex with data frames intermixed with PLCW frames in both directions. Variable size data field is supported with up to 1019 bytes transmit and receive.

Message Bypass (Expedited) Mode: This mode operated with either simplex or full-duplex communication. Delivery of the data is not guaranteed. This mode requires the data to be input to the transceiver as pre-formatted Proximity-1 frames. The transceiver locates frames in the input buffer and transmits them as is. A 32 bit CRC is calculated by the transceiver and appended at end of frame for error detection. Message bypass frames have the Quality of Service flag set indicating the sequence check and SCID are not required at the receiver. The receive end simply performs a CRC check and outputs content of the data field to the C&DH. If the CRC check fails, the frame is discarded. PLCW's are still generated and are still transmitted in the reverse direction, but the PLCW's are ignored and the next frame is transmitted regardless.

Unreliable Bitstream Mode: In this mode, the frame layer protocol is not used. The transceiver simply transmits a serial bit stream as it is input without formatting. Received data is output as received without verification. Bit sync and Viterbi lead are transmitted prior to transmitting data. Transmission continues if the buffer has data (otherwise the link is terminated). Communication can be simplex or full-duplex. The Odyssey relay block sets the transmit side (forward-link) to Standby when in Unreliable receive-only bitstream mode. If the forward-link is enabled, data is transmitted until either there is no more data to send or the relay session completes.

Doppler Measurement Mode: The difference between a phase locked carrier and a reference frequency can be measured and recorded by the Odyssey C/TT-505 radio Doppler measurement system . The reference frequency can be derived from the oscillator internal to the transceiver or from the Odyssey SSO. Doppler measurements are put in fixed-length packets containing the strobe-enabled time (seconds and subseconds), the zero-cross counter, and the time counter.

The user should be aware of the limitations of the Doppler measurement process. Zero crossings are needed to initiate the measurement and later to capture data. Extremely long intervals between initialization and the 1st snapshot (or between successive snapshots) can occur if there are few (or no) zero crossings. This will happen only if the Doppler offset is near 0 Hz. If carrier lock is lost during the measurement period, the Doppler Status word will be zero indicating the measurement is invalid. If the link margin allows, PSK data with reduced carrier level can be supported.

Tone Beacon Mode: This mode configures the transceiver to transmit a CW tone. Orbiter transceiver can select from four transmit frequencies (lander version of the transceiver can only transmit at 401.585625 MHz). Tone Beacon mode was originally conceived as a simple method to communicate with multiple microprobes, which is a capability that has never been used in practice (even with a single microprobe). Tone Beacon Mode can also be utilized to perform Doppler measurements. Orbiter transceiver can provide a CW tone at 437.1 MHz, which the Lander can coherently transpond with a CW transmission at 401.585625 MHz allowing for a 2-way Doppler measurement,

Canister Mode: In Canister mode, the Odyssey C/TT-505 creates an open loop sampling of the incoming baseband signal at a rate of 83.6 kHz and with a 1-bit analog-to-digital (A/D) conversion. The center frequency of the open loop recording is always at the nominal 401.585625 MHz receive-center frequency. No other sample rates or A/D conversion bit widths are possible. Due to Odyssey flight software constraints, the precision of the time-stamp is 20 ms. The Canister mode data are put in fixed-length packets, like the Doppler data packets, but with the raw RF data replacing the Doppler counter data. Odyssey's Canister mode has been superseded in practice by the superior open loop recording capability of Electra transceivers.

Receiver thresholds at transceiver input are provided in Table 3-3. Thresholds correspond to 1E−6 bit error rate, residual carrier modulation. Coded thresholds are for (7,½) convolutional coding.

Table 3-3: ODY typical receiver RF thresholds.[22]

Date Rates	Uncoded	Coded
8 kbps	−119.0 dBm	−124.0 dBm
32 kbps	−113.0 dBm	−118.0 dBm
128 kbps	−106.5 dBm	−112.0 dBm
256 kbps	−103.0 dBm	−108.0 dBm

Front end losses for ODY are 1.0 dB and 1.8 dB for transmit and receive paths, respectively. Front end losses for MSL are 1.7 dB and 3.3 dB for transmit and receive paths, respectively.

[22] *UHF Transceiver, Model C/TT-505, Theory of Operation / User's Manual,* Rev. 1.2, CNCEC-648855, Cincinnati Electronics, 04 May 2001.

3.1.4 *Odyssey – MSL UHF Link Budgets (Design Control Tables)*

These link budgets are derived from predicts originally produced by JPL's Generalized Telecom Predictor (GTP) tool. Calculation is for a single time instance in a typical fixed rate ODY - MSL relay pass with 3 dB margin. See Appendix A for a description of calculations.

Table 3-4: ODY-MSL link budget.

SPACECRAFT		ODY - MSL	
Link Type		Forward	Return
Modulation		Residual	Residual
Modulation Index	radian	1.047	1.047
Data Rate	kbps	8	256
Frequency	MHz	437.1	401.6
GEOMETRY DATA			
MSL - ODY Elevation	deg	59.8	59.8
MSL - ODY Azimuth	deg	205.7	205.7
ODY Boresight Offpoint	deg	12.7	12.7
ODY Boresight Clock	deg	232.2	232.2
MSL Boresight Offpoint	deg	30.2	30.2
MSL Boresight Clock	deg	154.4	154.4
TRANSMITTER PARAMETERS			
1. Transmitter Power	dBm	41.2	39.5
2. Circuit Loss	dB	-1.0	-1.7
3. Antenna Gain	dBic	4.0	2.9
4. EIRP	dBic	44.2	40.7
PATH PARAMETERS			
5. Range	km	465.0	465.0
6. Space Loss	dB	-138.6	-137.9
7. Polarization Loss	dB	-0.4	-0.2
8. Atmospheric and Multipath Loss	dB	0.0	0.0
9. Sky Temperature	K	190.0	190.0
RECEIVE PARAMETERS			
10. Antenna Gain	dBi	3.4	3.4
11. Circuit Loss	dB	-3.3	-1.8
12. Total Received Power	dBm	-94.7	-95.8
13. Reference Temperature	K	293.0	293.0
14. Noise Figure	dB	1.4	3.0
15. System Noise Temperature	K	354.2	516.6
16. Noise Spectral Density	dBm/Hz	-173.1	-171.5
17. Total Power-to-Noise Density Ratio Pr/No	dB-Hz	78.4	75.6
TELEMETRY PERFORMANCE			
18. Residual Carrier Loss	dB	-1.25	-1.25
19. Total Data Power	dB	-95.9	-97.1
20. Data Power-to-Noise Density Ratio Pd/No	dB-Hz	77.2	74.4
21. Data Rate	dB/Hz	39.0	54.1
22. System Losses	dB	-1.5	-1.2
23. Signal-to-Noise Ratio Eb/No	dB	36.7	19.1
DATA RATE AND LINK MARGIN			
24. Eb/No Threshold	dB	10.2	5.7
25. Margin Policy	dB	3.0	3.0
26. Eb/No Margin	dB	26.5	13.4
27. Theoretical Max Rate (no margin)	kbps	1024	4096
28. Available Max Rate	kbps	256	256

ANTENNA PATTERNS

MSL: mslRHCP_401.dat; mslLHCP_401.dat; mslRHCP_437.dat; mslLHCP_437.dat

ODY: odyRHCP_401.dat; odyLHCP_401.dat; odyRHCP_437.dat; odyLHCP_437.dat

3.1.5 *RF Deep-Space Link*

The deep-space link on ODY operates at X-band. The X-band telecommunications subsystem is designed to perform multiple functions; of relevance to this document are the receiving and transmitting functions. Major hardware components of the X-band subsystem are:

- 1.3 m High Gain Antenna (HGA) for uplink/downlink;
- A horn for Medium Gain Antenna (MGA) with 16 dBi gain (at boresight) for downlink;
- Patch Low Gain Antenna (LGA) for uplink;
- Small Deep Space Transponder (SDST) and Solid-State Power Amplifier (SSPA).

Figure 3-5 is a block diagram of the Odyssey X-band system.

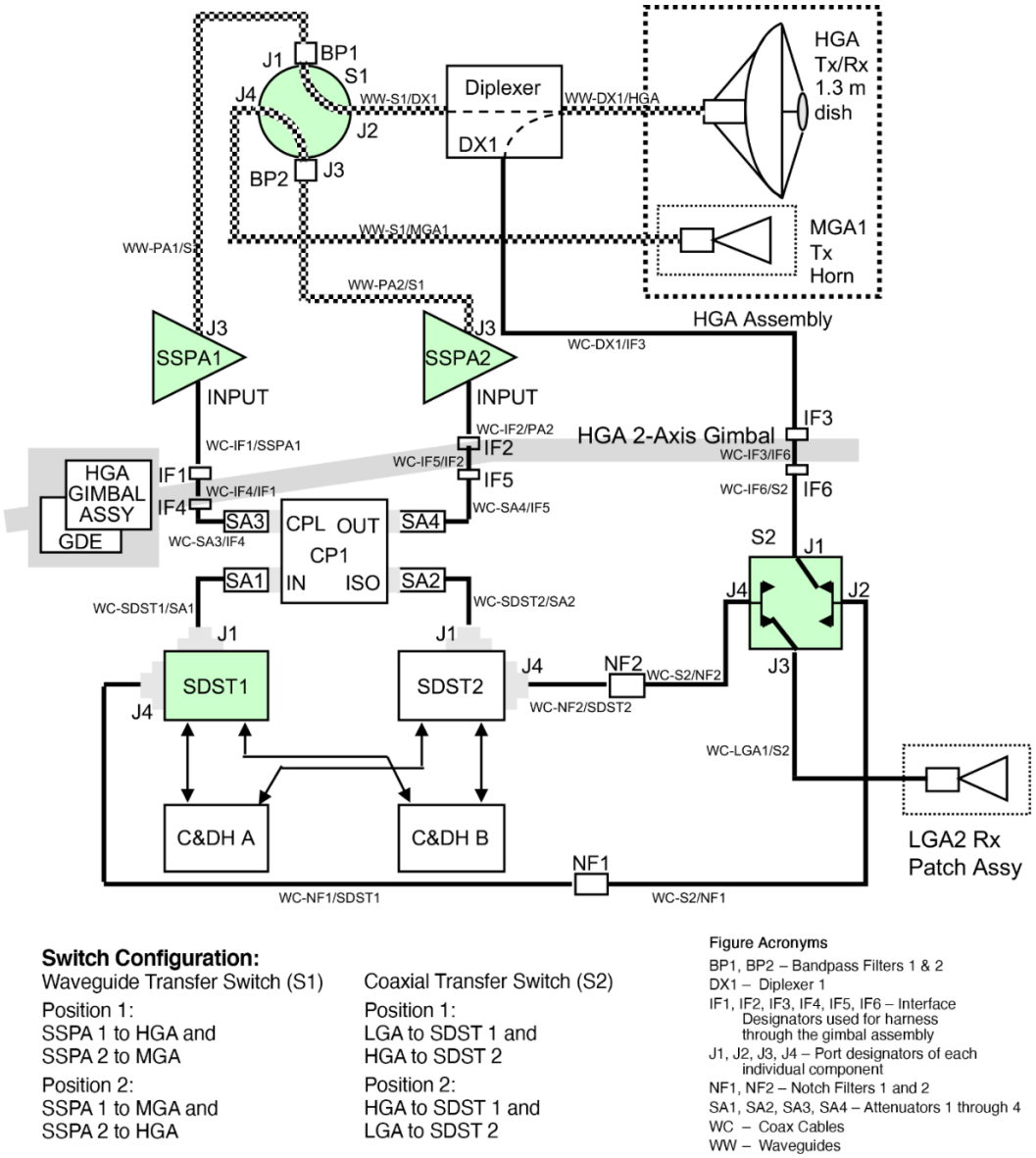

Figure 3-5: Odyssey X-band block diagram.

The X-band subsystem is designed to receive an X-band uplink carrier from the Deep Space Network (DSN). This carrier may be modulated by command data or by a ranging signal or both. While processing the uplink signal, the system demodulates the command data and the ranging signal. The X-band subsystem also generates a downlink carrier. The system may either use a crystal oscillator (the Aux Osc in the SDST) or the uplink carrier frequency as a reference. The downlink carrier may be phase-modulated with a composite telemetry signal and/or the demodulated ranging signal.

ODY downlink rates using direct carrier modulation range from 3.95 kbps at maximum range, to 142 kbps[23] at minimum range, and are shown in Figure 3-7. This figure shows the profile of supportable data rates at 70-m stations (red top curve) and 34-m stations (blue bottom curve) over a time span that includes several cycles of Earth–Mars distance. Handbook users can extend this profile to dates of interest, as the distance repeats its 26-month cycle.

Figure 3-6 shows downlink rate capability vs. calendar year based on use of the (15,1/6) convolutional code and the Maximum Likelihood Convolutional Decoder (MCD3).[24] Figure 3-7 shows capability based on the (7,1/2) code and an MCD2 decoder.

Uplink rates range from 7.8125 bps (emergency mode) to 2000 bps for standard operations.



Figure 3-6: ODY X-band data rates to DSN (MCD3 decoder).

[23] The calculated maximum rate is 166 kbps near minimum range, However, testing of the 166 kbps rate proved it was not reliable enough for use in flight ops. As of early 2021, the maximum rate used is 142 kbps.

[24] The DSN decommissioned MCD3 in 2022. This capability has since been replaced by ground station arraying.

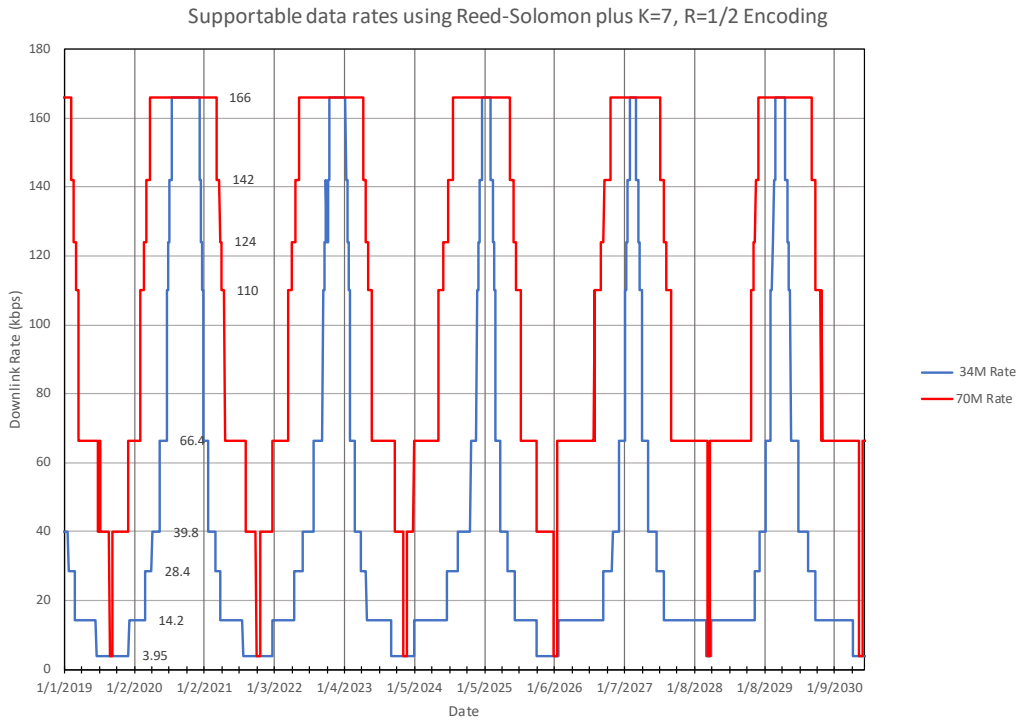

Figure 3-7: ODY X-band data rates to DSN (MCD2 decoder).

3.1.6 *End-to-End Data Flow and Network Services*

When ODY is used as a communications relay for landed spacecraft on the surface of Mars, the Surface Element (SE) project negotiates with the Odyssey team through the Mars Relay Operations Service (MaROS), a common interface provided by the Multimission Ground Systems and Services (MGSS) Program Office.

ODY provides end-to-end relay services in both forward-to-Mars and return-to-Earth directions. In the return-link direction, three relay products are supported: telemetry, Doppler, and canister mode data. ODY does not guarantee end-to-end reliability nor take custody of the relay and command products; therefore, it is the user mission's responsibilities to safe keep all data and commands that may require retransmission. ODY data relay operations can support either store-and-forward mode or bent-pipe mode if there is downlink capability during a relay session. Figure 3-8 depicts the end-to-end data flow for ODY.

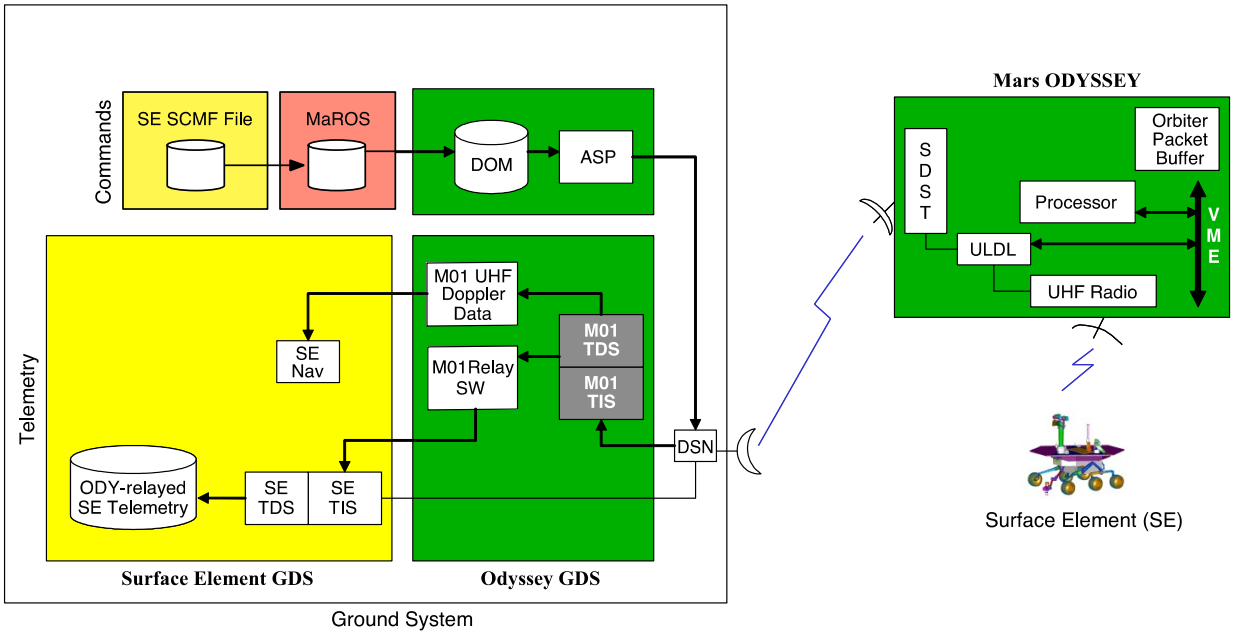

Figure Acronyms: ASP – Automated Sequence Processor; DOM – Distributed Object Manager; Nav – Navigation; SCMF – Spacecraft Command Message File; SW – Switch; TDS – Telemetry Data Distribution; TIS – Telemetry Input Subsystem; ULDL – Uplink/Downlink; VME – VersaModular Eurocard.

Figure 3-8: ODY UHF relay data flow.

3.1.6.1 Return-Link End-to-End Data Flow from a User Spacecraft on Mars, to ODY, to Earth

Figure 3-9 illustrates the end-to-end flow and processing of relay products.

The spacecraft telemetry data are sent to the ODY via the UHF link using the Proximity-1 user-defined data (UDD) service. The ODY C/TT-505 transceiver, which implements the Proximity Link protocol, is the terminal for RF communications with the spacecraft. The transceiver has temporary data storage consisting of a 128-kbyte First In First Out (FIFO) divided between the transmitting and receiving functions.

In the orbiter, the interface between the transceiver and the flight computer is a particular device called an Uplink/Downlink (ULDL) card, which has its own FIFO.

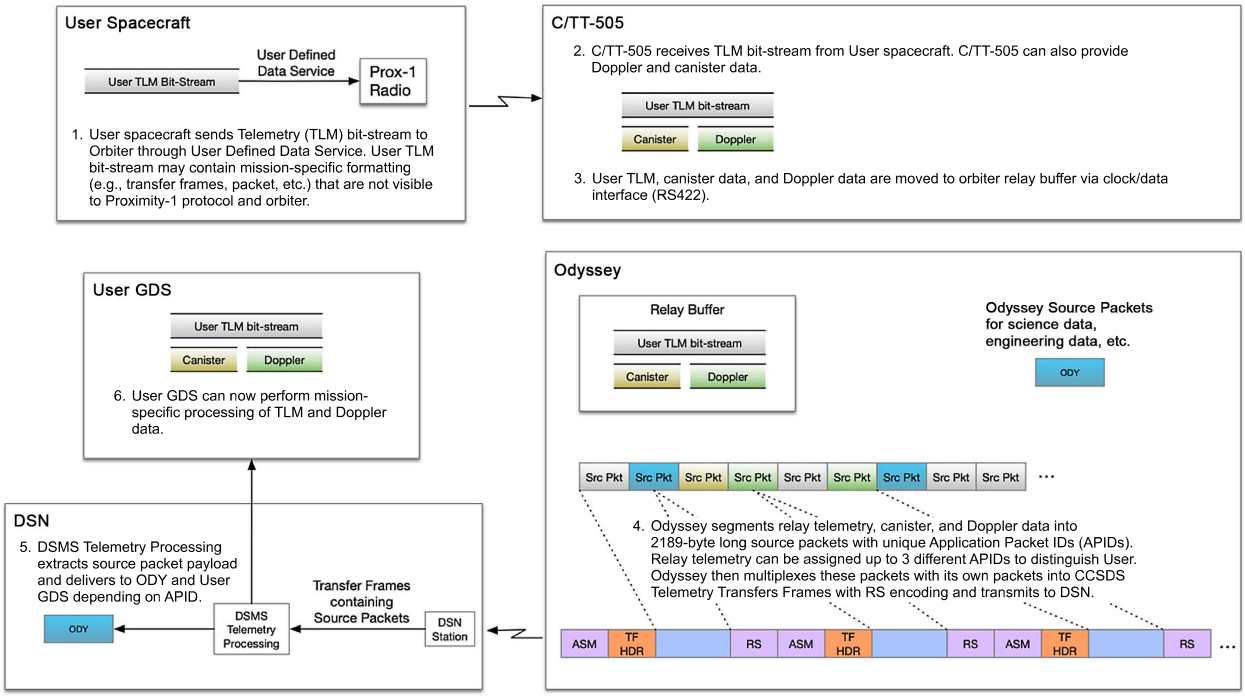

Figure Acronyms: ASM – Attached Synchronization Marker; RS – Reed-Solomon; TF HDR – Transfer Frame Header.

Figure 3-9: ODY return-link relay telemetry flow.

The relay data received by the UHF transceiver, the relay product, is stored in a particular segment of the orbiter memory, called the Relay Buffer, which is logically separated from other orbiter data (science measurement, engineering telemetry or commands). The size allocation of the relay buffer has to be shared with the buffers that contain orbiter data. The size of the buffer is configurable and controlled by the last initialization of the DWN_PCKT_BUFFER flight software object. When the buffer allocation for a particular Lander (user spacecraft) is full, new data overwrites the oldest data in the buffer.

Table 3-5 and Table 3-6 illustrate how the ODY relay packet buffer can be allocated to individual Landers such as the MSL and M2020 rovers. As user missions are added and retired from Mars or their relay needs change, the buffer allocation to each user spacecraft can be negotiated on a case-by-case basis.

The orbiter does not have any visibility into the content of the relay products, and the relay products are treated the same as any other orbiter data. ODY takes the received telemetry from each user spacecraft and formats it into 2189-byte long source packets, which are given specific Application Packet IDs (APID) that can be unique to each user spacecraft. These packets are then subject to the same rules (prioritization, aging, etc.) as the other orbiter science and engineering data.

Table 3-5: ODY memory allocation (example).

Packet Buffer Allocations	Standard Mapping
Code	18.0 MiB
File System	10.0 MiB
Thermal Emission Imaging System (THEMIS) Scratch Data	39.3 MiB
THEMIS	4.0 MiB
Gamma Ray Spectrometer (GRS)	7.0 MiB
Relay	**34.4 MiB**
ODY Health + Sys Margin	15.3 MiB
Total	**128.0 MiB**

Table 3-6: ODY relay packet buffer allocation for MSL EDL and surface communication (example).

Data Type	APID	EDL Comm (Pkts)	EDL Comm (MB)	EDL Comm (Mbits)	MSL Surface (Pkts)	MSL Surface (MB)	MSL Surface (Mbits)
MSL Reliable	47	8675	19.08	152.7	9361	20.6	164.8
MSL EDL Unreliable	48	686	1.5	12.1	0	0	0

In addition, the orbiter can collect other types of relay products, such as Doppler data, if commanded, and UHF transceiver housekeeping data. Doppler and canister data are each packetized into unique APIDs, which are assigned their own priorities in the downlink stream.

The packets are multiplexed with other orbiter data (based on priority data tables); then the packets are formatted into Reed-Solomon transfer frames and sent to the ground. Relay products come down in the order they are received. Additionally, the relay products stay in the packet buffer until they are overwritten with more relay products. While the orbiter has the ability to re-transmit data from a specified relay session by manual command, it is an inefficient process; in practice it is usually preferable for the user mission to handle re-transmits of missing data.

Communications with the ground uses X-band via the SDST. The ULDL card is also the interface between the computer and the transponder. Relay products and science data share the same downlink bandwidth. Relay data are typically transmitted with high priority, although not the highest. This priority provides protection against late DSN lock-ups. In general, how relay data are prioritized is to be negotiated between individual user missions and the relay orbiter project. It is important to note that ODY cannot transmit telemetry to Earth via X-band and transmit commands to a user spacecraft via UHF at the same time. The ULDL card can only support one data stream at any given time.

On the ground, the DSN Deep Space Operations Center (DSOC) identifies user relay packets by their APIDs in the ODY downlink stream and forwards them on to the user MOC. At the end of the process, the science and engineering telemetry data received in the user Ground Data System (GDS) via the ODY UHF relay should look as if it had been received via the X-band direct-to-Earth (DTE) link.

3.1.6.2 Forward-Link End-to-End Data Flow from Earth, to ODY, to a User Spacecraft on Mars

Figure 3-10 illustrates the data flow and processing in the forward-link direction. ODY can support forward-link commanding. However, the orbiter cannot transmit telemetry via X-band to Earth while transmitting commands to the surface via UHF. Therefore, if forward-link commanding is utilized, the orbiter must wait for the relay overflight to finish before starting to downlink relay products over the deep-space link. In addition, ODY has the ability to store multiple command files destined for multiple user spacecraft.

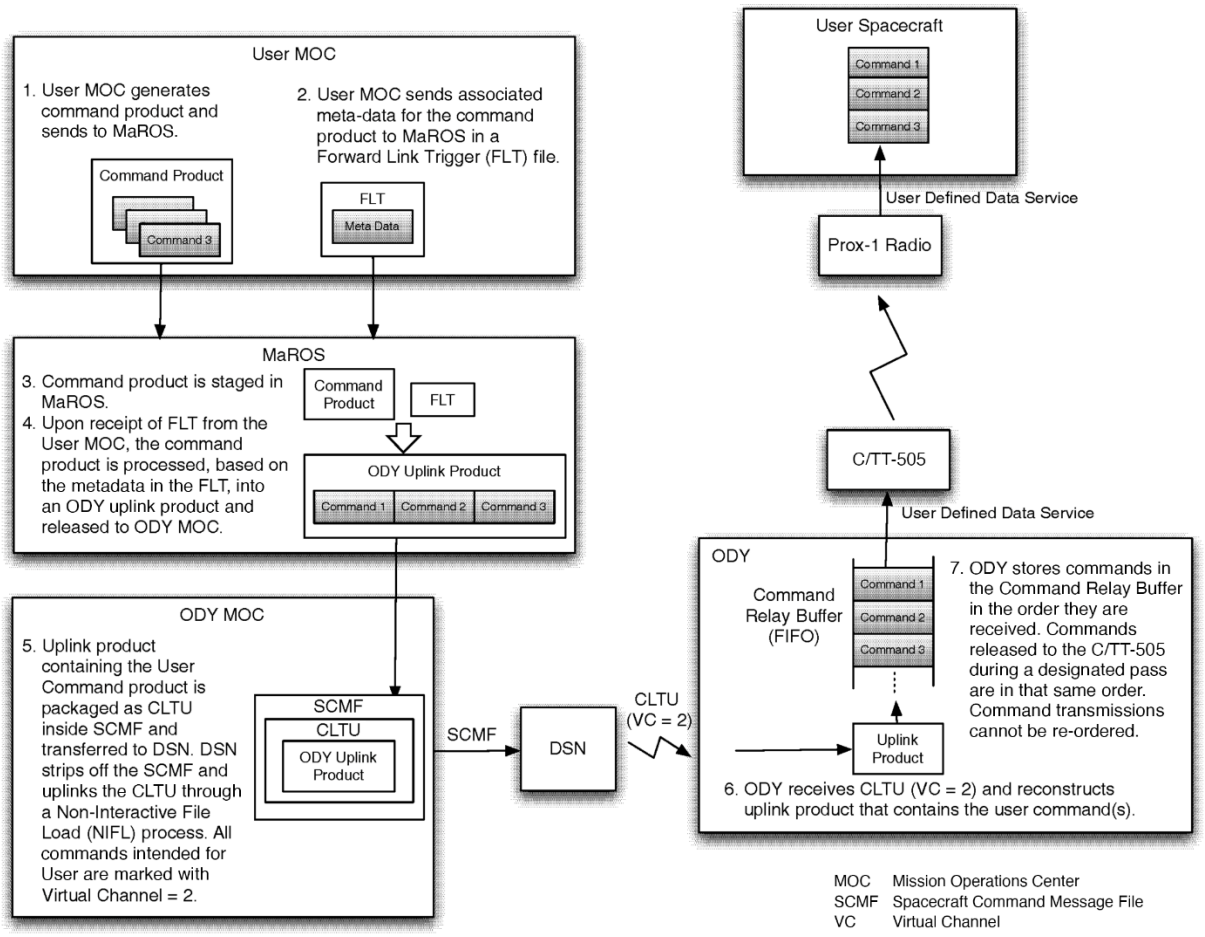

Figure 3-10: ODY forward-link command flow.

A user mission generates a command load and submits it to MaROS. Prior to the intended radiation time, additional metadata and a Forward-Link Trigger (FLT) file are sent by the user mission to MaROS, authorizing the release of the command to the orbiter GDS. Upon receipt of the FLT, MaROS processes the command according to the metadata into an ODY uplink product and releases it to the ODY GDS. The uplink product is formatted into an Odyssey product referred to as a Virtual Channel 2 (VC2) “file load”. This product is partitioned into individual Command Link Transmission Units (CLTU) and, when radiated by the DSN to the orbiter, recreates the file load in the onboard dynamic random access memory (DRAM). The resulting file contains the bits in the same order and format as if they were to be radiated directly to the user spacecraft, which is what the C/TT-505 dutifully performs during a forward-link-enabled relay session. Approximately 3.5 Mbytes of file system space are available for storage

of command files. Once on board ODY, the content of the command file is extracted and placed in the Command Relay Buffer, which is a FIFO buffer.

Note that a “command load” directed to a user spacecraft can be individual commands, instrument configuration files, flight software loads, etc. From ODY’s perspective, the command load is simply a bit-stream. Forward-link data are transferred to ODY in numbered files (file01–file19), with the numbering determined by the user mission. These files can be transmitted to ODY in any order and are stored in the ODY file system. When invoked for a particular relay session, the onboard ODY relay block assembles these files in numerical order prior to the data being passed to the Command Relay FIFO buffer.

The ODY UHF Block identifies relay sessions by DOY and relay session (“pass”) number. A forward-link file naming convention allows these numbered forward-link products to be matched to a particular relay session ID and thereby sent to the correct user spacecraft. The naming convention is SE_doy###_pass##_file##.dat. “SE” is the user spacecraft ID number. The block can accommodate up to 19 command files per relay session. A permanent “file00” is stored onboard and typically contains a no-operation (NO-OP) command but can contain any commands or data the user mission desires to receive during each relay session. This file is always the first data sent. All files for a relay session are concatenated in numerical order into a single file, which is sent to the Command Relay Buffer.

3.1.7 *Idiosyncrasies, Limitations, and Other Notes*

3.1.7.1 Proximity-1 Frame Duplication caused by sudden drop in Signal to Noise Ratio (SNR)

a. **Mode**: Reliable

b. **Link**: Forward

c. **Description**: When the link is abruptly interrupted (loss of lock within 1 sec at 8 kbps), the data field of one Proximity-1 frame (1019 bytes, 233, 37 bytes respectively for 8, 32, 128 kbps return-link data rate) can be repeated twice at the output of the receiver. See Problem Failure Report (PFR) Z74364.

d. **Effect**: Possible repetition of immediate command and/or loss of commands—forward-link data processing on the ground (i.e., sending commands twice) mitigates this.

3.1.7.2 Bit missing in Coded Mode caused by sudden drop in SNR

a. **Mode**: Reliable, Unreliable

b. **Link**: Return

c. **Description**: When the link is coded and there is a sudden drop in SNR (good to no lock within 1 sec at 8 kbps, 64 ms at 128 kbps), a bit might be missing at the output of the transceiver.

d. **Effect**: Loss of telemetry transfer frame in return-link data with sudden drop in power.

3.1.7.3 Performance limited by Doppler Range

a. **Mode**: Reliable

b. **Link**: Return

c. **Description**: Due to the carrier acquisition performance of ODY, data transfer should not be expected when Doppler shift in the ODY receiver is less than −6.5 kHz or greater than +7.5 kHz. For a non-coherent or simplex link, this corresponds to range rates of greater than 4.9 km/s or less than 5.6 km/s. For a coherent link in which the user transceiver is configured to coherently transpond the forward-link carrier, the threshold Doppler shifts occur for range rates of greater than 2.4 km/s or less than 2.8 km/s.

d. **Effect**: Relay users should incorporate this into their link prediction tools.

3.1.7.4 Compatibility Issues between Odyssey C/TT-505 and Electra-Lite

a. **Description**: The C/TT-505 has some issues and limitations in its interoperability with the Electra radio. Key items are listed below. Please see the memo[25] *Electra-CE 505 Radio Compatibility* for details.

   1) All ODY data relay operations are strictly store-and-forward.

   2) The ODY return- and forward-link frequencies are fixed and ODY uses a single channel for both hailing and data relay. Hailing must be carefully configured to interoperate with the C/TT-505 radio.

   3) ODY UHF forward- and return-link data rates are limited; see Table 3-2.

   4) The ODY Proximity-1 data field size is limited to a maximum of 1019 bytes.

   5) There are a number of minor differences in header settings; the reference IOM has details.

3.1.7.5 Bandwidth Sharing among Multiple Surface User Spacecraft

a. **Link**: Return

b. **Description**: Currently each relay user is assigned a portion of the onboard buffer. The buffered UHF data is relayed to Earth based on project-level priority.

c. **Effect**: A higher-priority project would see its UHF data transmitted by ODY at a higher fraction of Odyssey's X-band downlink capacity with little or no observable delay, while a lower-priority project would experience more delay in receiving its UHF data. While there are no conclusive quantitative data to measure the long-term impact, short-term data analysis shows a reduction of data volume and increase in latency for lower-priority users.

d. **Recommendation**: Relay planner should factor into their operation the impact of prioritized sharing of the relay asset in predicting latency and data return.

[25] *Electra-CE 505 Radio Compatibility,* IOM-Electra-03-061, Jet Propulsion Laboratory, California Institute of Technology, Pasadena, CA, 23 June 2003.

3.1.8 *Reference Documents*

2001 Mars Odyssey-Mars Exploration Rover Relay Link Interface Control Document, MER 420-3-486, JPL D-20099, Jet Propulsion Laboratory, California Institute of Technology, Pasadena, CA, December 2001.

2001 Mars Odyssey Relay Data Service, PD 722-803, JPL D-19591, Jet Propulsion Laboratory, California Institute of Technology, Pasadena, CA, April 2001.

2001 Mars Odyssey Relay Operations Plan, JPL D-87831, Jet Propulsion Laboratory, California Institute of Technology, Pasadena, CA, 28 January 2015.

C. Edwards, *Updated Information on Orbit States of NASA Relay Orbiters for Telecommunications Support of the Insight Lander and EMTGO EDM,* JPL IOM# 6060-CDE-13-001, Jet Propulsion Laboratory, California Institute of Technology, Pasadena, CA, 01 February 2013.

Electra-CE 505 Radio Compatibility, IOM-Electra-03-061, Jet Propulsion Laboratory, California Institute of Technology, Pasadena, CA, 23 June 2003.

Mars 2001 Odyssey, Telecommunications System Operations Handbook, Version 3.0, PD 722-802, JPL D-19010, Jet Propulsion Laboratory, California Institute of Technology, Pasadena, CA, 27 March 2001.

Mars Relay Description for Discovery 2019 Proposals, Mars Exploration Program, Jet Propulsion Laboratory, California Institute of Technology, Pasadena, CA, 10 April 2019.

Odyssey Telecommunications, DESCANSO Design and Performance Summary Series, Article 6, Jet Propulsion Laboratory, California Institute of Technology, Pasadena, CA, October 2002.

UHF Transceiver, Model C/TT-505, Theory of Operation/User's Manual, Rev. 1.2, CNCEC-648855, Cincinnati Electronics, 04 May 2001.

3.2 MARS EXPRESS

3.2.1 *Overview*

Mars Express (MEX), so called because of the rapid and streamlined development time, represents the European Space Agency's first visit to another planet in the Solar System. MEX was ESA's first Mars mission carrying a science payload suite designed to characterize Martian surface and sub-surface and probe the ionosphere of Mars. Just like the other science orbiters, MEX also carries a relay package to support the relay link to the Mars Landers. These assets include landed spacecraft and vehicles.

Arriving at Mars in 2003, MEX is the second longest surviving, continually active spacecraft in orbit around a planet other than Earth, behind only NASA's 2001 Mars Odyssey. As of early 2021, MEX continues to return science data and provide occasional relay services to surface vehicles. Mars Express has been granted several mission extensions. The latest extension is provisionally through the end of 2028.



Figure 3-11: Mars Express (MEX).

The orbital elements for an epoch of 26-NOV-2025 are shown below in Table 3-7. These orbital elements produce an elliptical orbit with a quasi-polar inclination and duration of almost seven hours with the following characteristics:

Table 3-7: MEX orbital parameters.

Mission Information	
Launch	June 2, 2003
MOI	December 25, 2003
Orbit Ops Commission Date	2004
End of Prime Mission	November 1, 2005
Mission Funded Until	End of 2026 (provisionally to 2028)
Orbit Information	**MEX Parameter (Mean value)**
Pericenter Distance (km)	3741.9
Apocenter Distance (km)	13892.9
Orbit Information	MEX Parameter (Mean value)

Table 3-7: MEX orbital parameters.

Semi-major Axis (km)	8817.4
Eccentricity	0.5756
Inclination (deg)	87.14
Longitude of Ascending Node	64.4
Epoch	26-NOV-2025, 23:45:26.95 Universal Time Coordinated (UTC)
Argument of Periapsis (deg)	239.07
Orbit period	6.982658 hrs

(Mean Keplerian orbit elements, Mars-centered, Mars mean equator and Earth mean equator, reference epoch J2000, IAU 2000 Coordinate System)

3.2.2 *MEX UHF Transceiver and Antenna*

3.2.2.1 Transceiver

The Mars Express Lander Communications (MELACOM) ultra-high frequency (UHF) transceiver[26] was designed by the British technology firm QinetiQ. The transceiver is a fully redundant unit. It implements Proximity-1 protocol CCSDS. 211.0-R-2. MELACOM can operate in five modes:

- Open loop recording “canister mode”
- Doppler measurements after radio frequency (RF) lock on the return-link carrier
- Proximity-1 with landed spacecraft
- Framed Bitstream (Expedited) mode
- Carrier only

MELACOM’s capabilities are defined in Section 3.2.3.

3.2.2.2 UHF Antenna

MEX utilizes two UHF patch antennas for the forward-link and return-link, respectively. This arrangement obviates the need for a diplexer at the cost of increasing antenna footprint.

Figure 3-12 and Figure 3-13 show MEX UHF antenna gain patterns. The MEX-measured pattern cuts were provided by ESA and synthesized into the 2D patterns. All pattern data are presented as right-hand circularly polarized (RCP) gain in units of dBic (decibels relative to an isotopic circularly polarized radiator).

Pattern data are presented in a coordinate system looking down to Mars and oriented with spacecraft velocity vector pointing up-page, as though the spacecraft were flying south to north. The color-scaled 2D patterns (presented in the downward looking coordinate system) represent the incident power distribution that would appear near the ground, as seen from the orbiter, assuming the antenna were operating as a transmitting antenna. Viewing antenna pattern data in the native antenna coordinate system causes the patterns to flip left-to-right

[26] For more detail on MELACOM, see Reboud, O., et al. An interplanetary and interagency network–Lander communications at Mars. In *SpaceOps 2008 Conference*, p. 3536, May 2008.

around the coordinate axis pointing in the velocity vector. In the 2D patterns, the global pattern maximum gain is indicated by a single boldface number.

The 3 dB beamwidth is computed as the average gain across all azimuth angles and represents the full beam at −3 dB from boresight. For MEX, the 3 dB beamwidth is 62 deg at both 401 MHz and at 437 MHz.

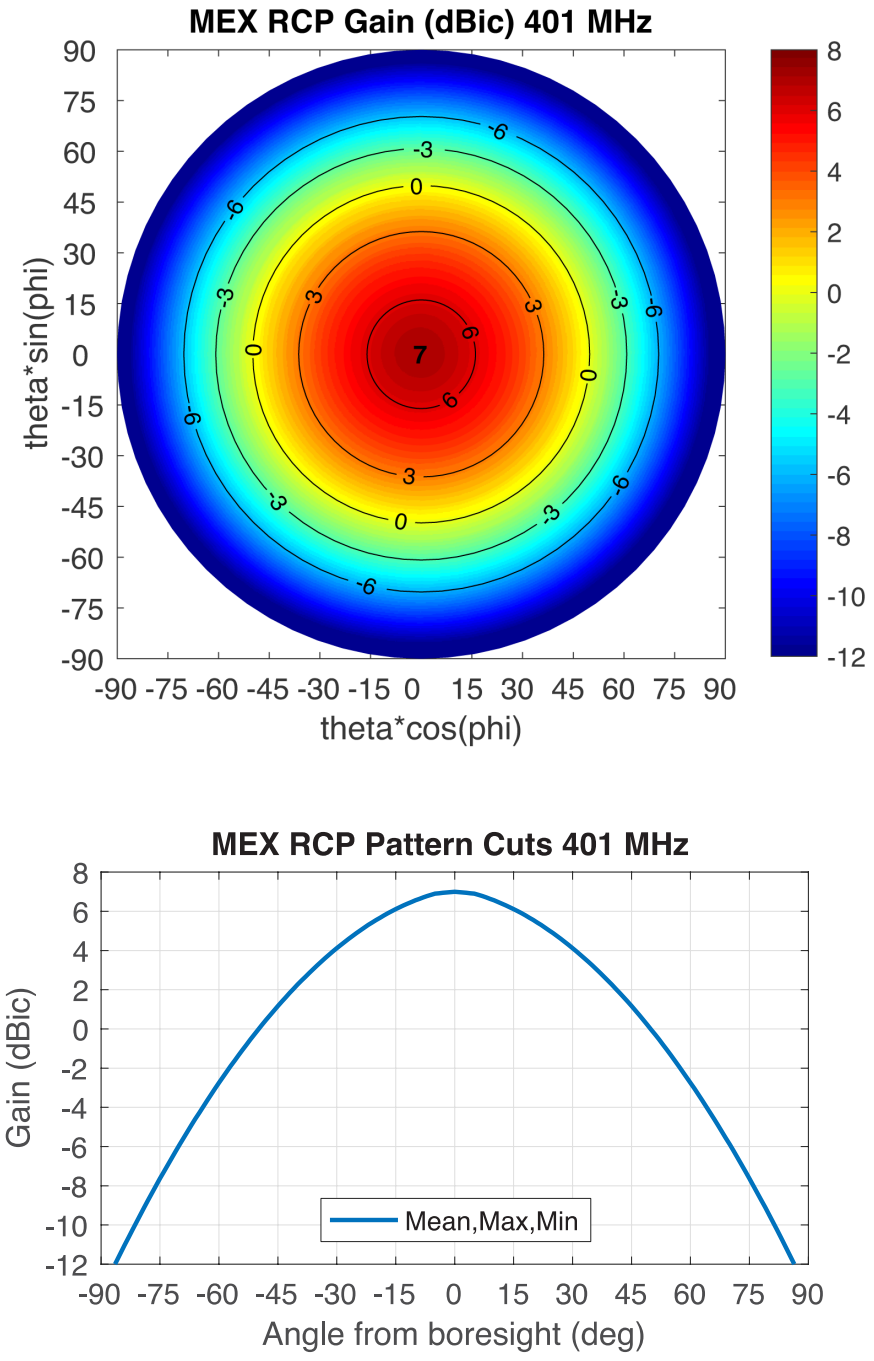

Figure 3-12: MEX UHF return-link patterns. *Upper:* 2D composite pattern. *Lower:* 1D pattern cut.

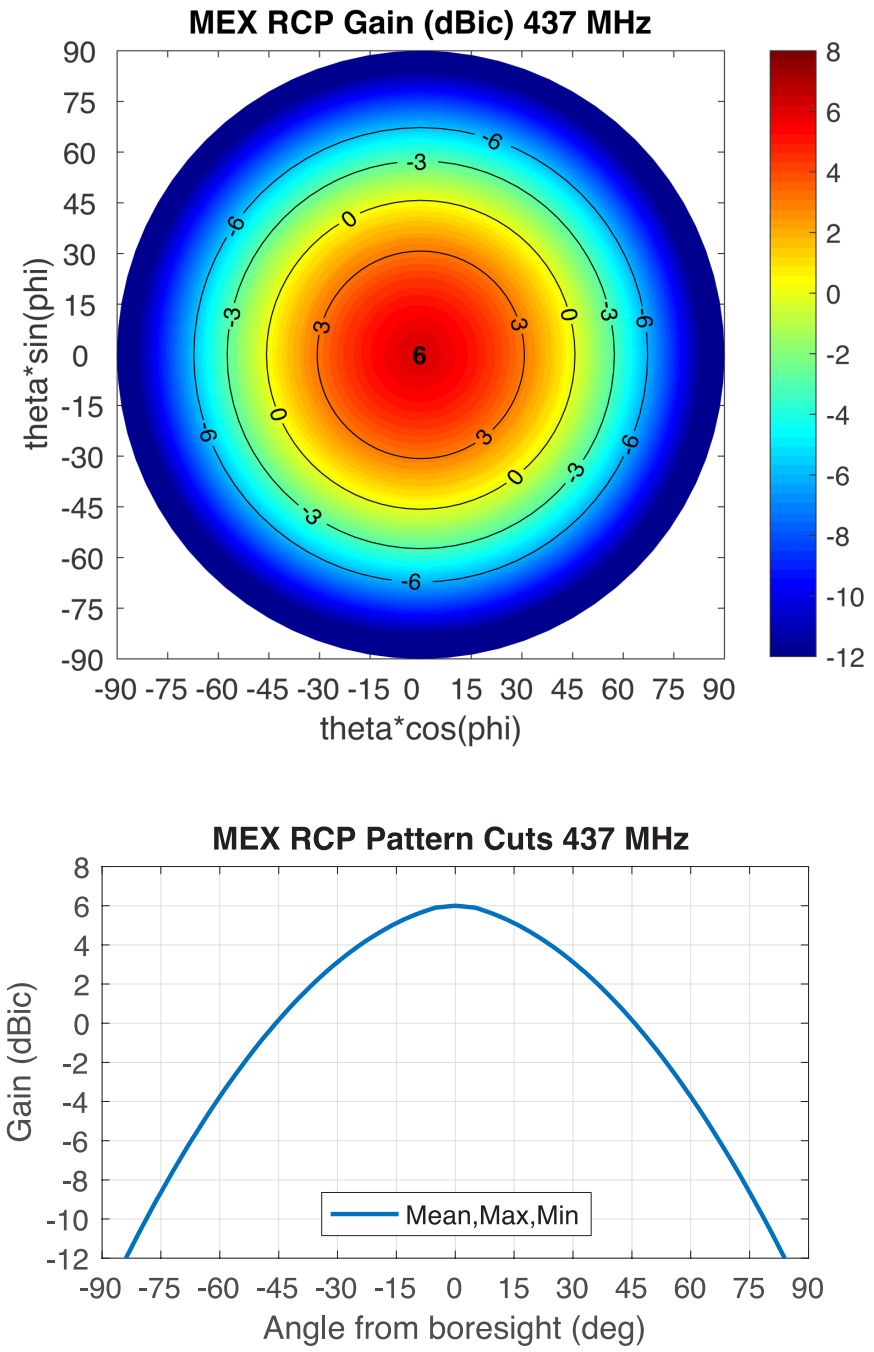

Figure 3-13: MEX UHF forward-link patterns. *Upper:* 2D composite pattern. *Lower:* 1D pattern cut.

3.2.3 *RF Proximity Link Services*

The proximity link between the spacecraft and MEX and the details of the MEX RF Services are shown in Table 3-8, which includes the communications, navigation, and timing services.

Table 3-8: MEX RF services.

Key Functions	Parameters	Additional Notes
Communication Services		
Mode of Operation	Full-duplex	
Hailing Frequency	437.1 MHz	
Forward-Link Frequency	437.1 MHz	
Return-Link Frequency	401.585625 MHz	
Antenna Polarization	RCP	
Modulation	PCM-Bi-Phase-L/PM	
	Residual carrier with modulation index of 60° (1.05 radians)	
Coding	Convolutional coding rate ½ with constraint length 7, non-inverted G2	G2 not implemented per prox-1 spec which specifies G2 to be inverted
	Convolutional decoding with 3-bit soft quantization	
	Option to bypass coding/decoding	
Forward-Link Data Rates	2 kbps to 8 kbps	
Forward-Link Frame Buffer Size	Maximum of 20,444 bytes per set of Prox-1 frames delivered on the forward-link to a lander, before buffer refill.	
Return-Link Data Rates	2 kbps, 4 kbps, 8 kbps, 16 kbps, 32 kbps, 64 kbps, 128 kbps[27]	Threshold @ Bit Error Rate (BER) of 1E−6 for Residual Carrier modulation
Prox-1 Services Not Available	Half-duplex mode	
Other Service	Prox-1 framed Bitstream (Expedited mode) reception	1-way return-link data without hailing and without received frames acknowledgements
Navigation and Timing Services		
Navigation	1-way Doppler measurement	In phase shift keying (PSK) receive mode after carrier lock
Open Loop Recording	Full spectrum recording with bit sample rate of 42,096 kHz	
Carrier Only	Broadcast of unmodulated carrier at 437.1Mhz	Used in UHF radio science

Table 3-9 provides MEX receiver thresholds at transceiver input for 1E−6 bit error rate. Coded thresholds are for (7,½) convolutional coding with residual carrier.

Table 3-9: MEX receiver thresholds.

Date Rates	Uncoded	Coded
2 kbps	−127 dB	−132 dB
4 kbps	−124 dB	−129 dB
8 kbps	−119 dB	−124 dB
16 kbps	−116 dB	−121 dB

[27] The MELACOM Viterbi decoder under certain conditions will not correctly synchronize return-link data streams at 128 kbps, as verified by MEX-MSL ground testing in 2012. Operation at 128 kbps is possible when convolutional coding/decoding is bypassed.

32 kbps	−113 dB	−118 dB
64 kbps	−110 dB	−115 dB
128 kbps	−107 dB	−112 dB

3.2.4 *Mars Express - MSL UHF Link Budgets (Design Control Tables)*

These link budgets are derived from predicts originally produced by JPL's Generalized Telecom Predictor (GTP) tool. Calculation is for a single time instance in a typical fixed rate MEX - MSL relay pass with 3 dB margin. See Appendix A for a description of calculations.

Table 3-10: MEX-MSL link budget.

SPACECRAFT		MEX - MSL	
Link Type		Forward	Return
Modulation		Residual	Residual
Modulation Index	radian	1.047	1.047
Data Rate	kbps	8	32
Frequency	MHz	437.1	401.6
GEOMETRY DATA			
MSL - MEX Elevation	deg	20.0	20.0
MSL - MEX Azimuth	deg	340.8	340.8
MEX Boresight Offpoint	deg	40.5	40.5
MEX Boresight Clock	deg	342.4	342.4
MSL Boresight Offpoint	deg	70.0	70.0
MSL Boresight Clock	deg	19.2	19.2
TRANSMITTER PARAMETERS			
1. Transmitter Power	dBm	37.0	39.5
2. Circuit Loss	dB	-1.0	-1.7
3. Antenna Gain	dBic	1.3	0.4
4. EIRP	dBic	37.3	38.1
PATH PARAMETERS			
5. Range	km	2565.0	2565.0
6. Space Loss	dB	-153.4	-152.7
7. Polarization Loss	dB	-0.6	-1.1
8. Atmospheric and Multipath Loss	dB	0.0	0.0
9. Sky Temperature	K	190.0	190.0
RECEIVE PARAMETERS			
10. Antenna Gain	dBi	1.9	2.3
11. Circuit Loss	dB	-3.3	-1.8
12. Total Received Power	dBm	-118.2	-115.2
13. Reference Temperature	K	293.0	293.0
14. Noise Figure	dB	1.4	3.0
15. System Noise Temperature	K	354.2	516.6
16. Noise Spectral Density	dBm/Hz	-173.1	-171.5
17. Total Power to Noise Density Pr/No	dB-Hz	54.9	56.3
TELEMETRY PERFORMANCE			
18. Residual Carrier Loss	dB	-1.25	-1.25
19. Total Data Power	dB	-119.4	-116.5
20. Data Power to Noise Density Pd/No	dB-Hz	53.7	55.0
21. Data Rate	dB/Hz	39.0	45.1
22. System Losses(SysLoss)	dB	-0.6	-1.2
23. Eb/No	dB	14.1	8.7
DATA RATE AND LINK MARGIN			
24. Eb/No Threshold	dB	10.2	5.7
25. Margin Policy	dB	3.0	3.0
26. Eb/No Margin	dB	3.9	3.0
27. Theoretical Max Rate (no margin)	kbps	8	64
28. Available Max Rate	kbps	256	256

```
ANTENNA PATTERNS
MSL: mslRHCP_401.dat; mslLHCP_401.dat; mslRHCP_437.dat; mslLHCP_437.dat
MEX: mexRHCP_401.dat; mexLHCP_401.dat; mexRHCP_437.dat; mexLHCP_437.dat
```

3.2.5 *RF Deep-Space Link*

The MEX telecommunication system supports the functions of tracking, telecommand, and telemetry for each phase of the mission; the deep-space links on MEX operate at S-band and X-band. The spacecraft telecommunication subsystem consists of:

- Dual band, body-fixed 1.8-m high gain antenna (HGA) for uplink/downlink, in X-band or S-band
- Two S-band low gain antennas (LGAs) for uplink/downlink during launch and when X/S-band HGA is not accessible; usable for low bit rate uplink and downlink carrier detection at most Earth–Mars distances
- A redundant set of dual band transponders for the uplink and downlink
- A redundant X-band traveling wave tube amplifier (TWTA)

Figure 3-14 is a block diagram of the MEX X-band system.

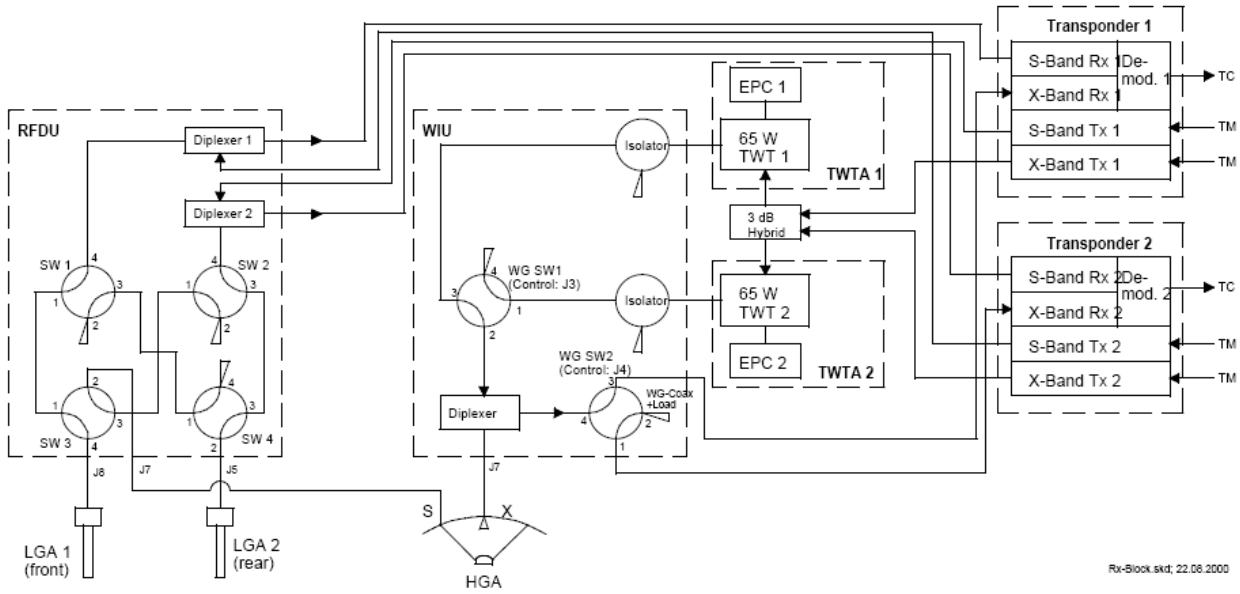

Figure 3-14: MEX X-band block diagram.

For the uplink, the telecommunications subsystem supports unmodulated carrier, command, ranging, and command and ranging. The modes supported for the downlink are unmodulated carrier, telemetry, ranging, and telemetry and ranging. The transponder operates

in coherent or in non-coherent mode depending on the lock status of the receiver. Transmitted symbol rates range from 21.3333 sps to 524288 sps. The uplink telecommand bit rates range from 7.8125 bps to 2000 bps.

Figure 3-15 shows supportable downlink data rates to various ESA and NASA ground stations. The plot begins at Mars arrival and repeats on 26-month centers. Handbook users can extend the repetitive plotted capability to their current mission time.

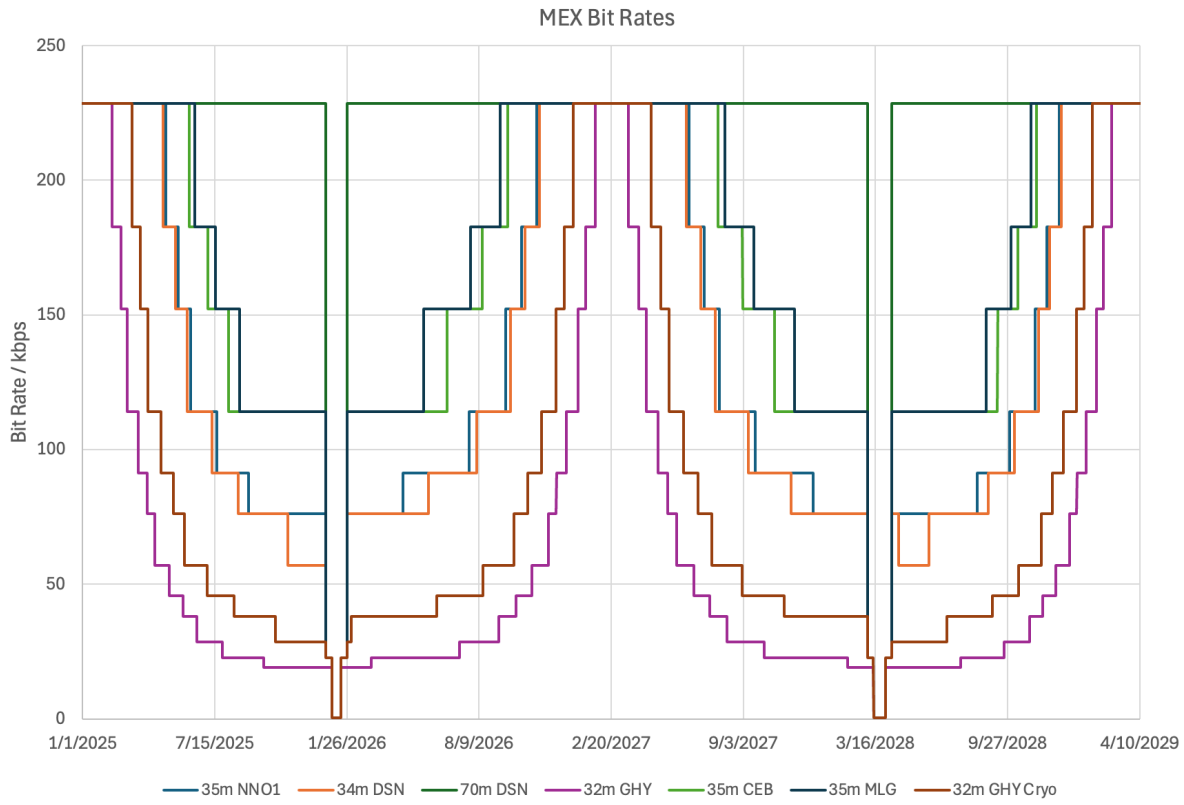

Figure 3-15: MEX X-band data rates.

3.2.6 *End-to-End Data Flow and Network Services*

MEX provides end-to-end relay service in the return-link and forward-link directions. As an ESA mission, MEX downlinks the relay data via the European Space Tracking Network (ESTRACK) or Deep Space Network (DSN) to the European Space Operations Centre (ESOC). DSOC retrieves user mission data from the Secure File Transfer Protocol (SFTP) Server and distributes it appropriately. Figure 3-16 illustrates the end-to-end data flow and processing for MEX.

The two UHF transceivers, MELACOM-A and MELACOM-B, implement the CCSDS Proximity-1 Link Protocol. As the relay products are received by MELACOM via Proximity-1's User-Defined Data (UDD) service (CCSDS 211.0-B-5, 2013), they are packetized as MELACOM Space Packets, one per Proximity-1 frame, and stored as a file onboard the orbiter. The Packet Utilization Standard (PUS) Service 13, a framework for managing application level

data products and commands using the Space Packet standard (CCSDS 133.0-P-1.1, 2019), sends the MELACOM Packets inside TM frames which are then received either by ESTRACK or DSN and forwarded to ESOC. ESOC extracts the MELACOM packets from the frames and makes this file of MELACOM packets available on an FTP server. For NASA users, the DSN DSOC performs the query and retrieval of relay products on behalf of the user mission, strips away the MELACOM Packet header, and repackages the relay products inside a Standard Formatted Data Unit (SFDU) that can then be processed by the user mission's GDS.

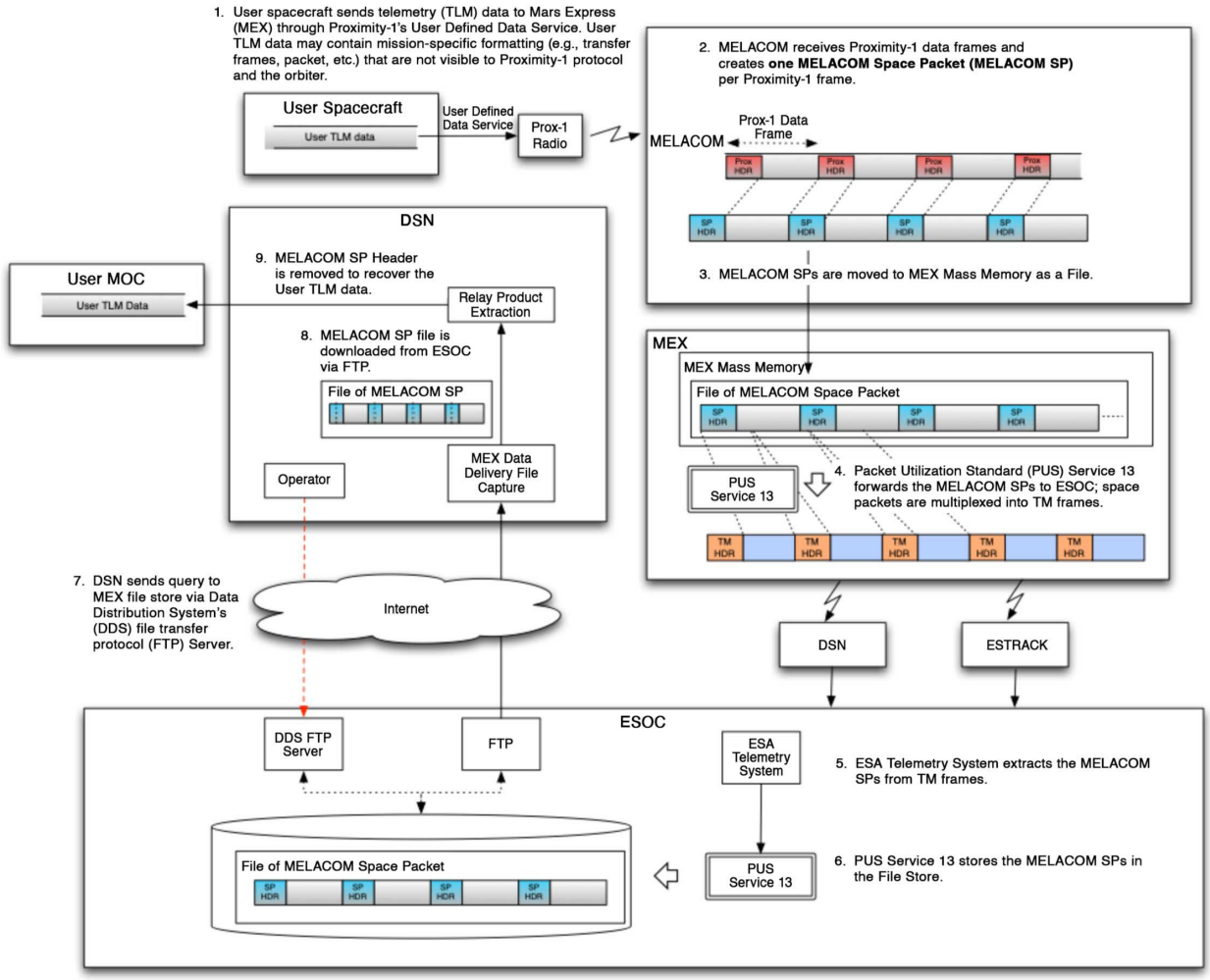

Figure 3-16: End-to-end UHF relay data flow between ESOC and MEX.

MEX also relays commands to Landers, as shown in Figure 3-17. From the user mission perspective, the process is similar to any other orbiter with MaROS acting as a common interface. Although MEX is an ESA orbiter, MaROS handles the staging of lander command files and hides from the user the details of interfacing with ESOC (note: all communications between MEX and MaROS are handled through ERCO). First, a command bit pattern file (BPF), also called a forward-link binary file (FLB), is transferred from the user mission GDS to MaROS. Then a separate forward-link trigger (FLT) file is sent to MaROS to trigger the actual release of the command file to the MEX mission operations center (MOC). MaROS then automatically

sends the FLB and FLT file and relevant overflight information in the Overflight Summary File (OSF) to MEX MOC via a Forward Link Push Mechanism.[28] The MEX flight operations team can also manually retrieve both the FLB and the FLT from MaROS, and convert them to the needed MEX format, typically the MELACOM Space Packet format in compliance with the PUS Service-13 standard. From that point on, MEX's uplink process delivers the data to MEX and eventually to MELACOM's local memory where the Space Packet format is removed. The final hop of the relay uses the Proximity-1's UDD service whereby the command bit pattern is radiated as a serial stream to the Lander. So far, Mars Express has supported periodic test relay sessions with Perseverance and Curiosity (and previously with InSight, Mars Exploration Rovers, and Phoenix) but has not been used to support their primary surface operations.

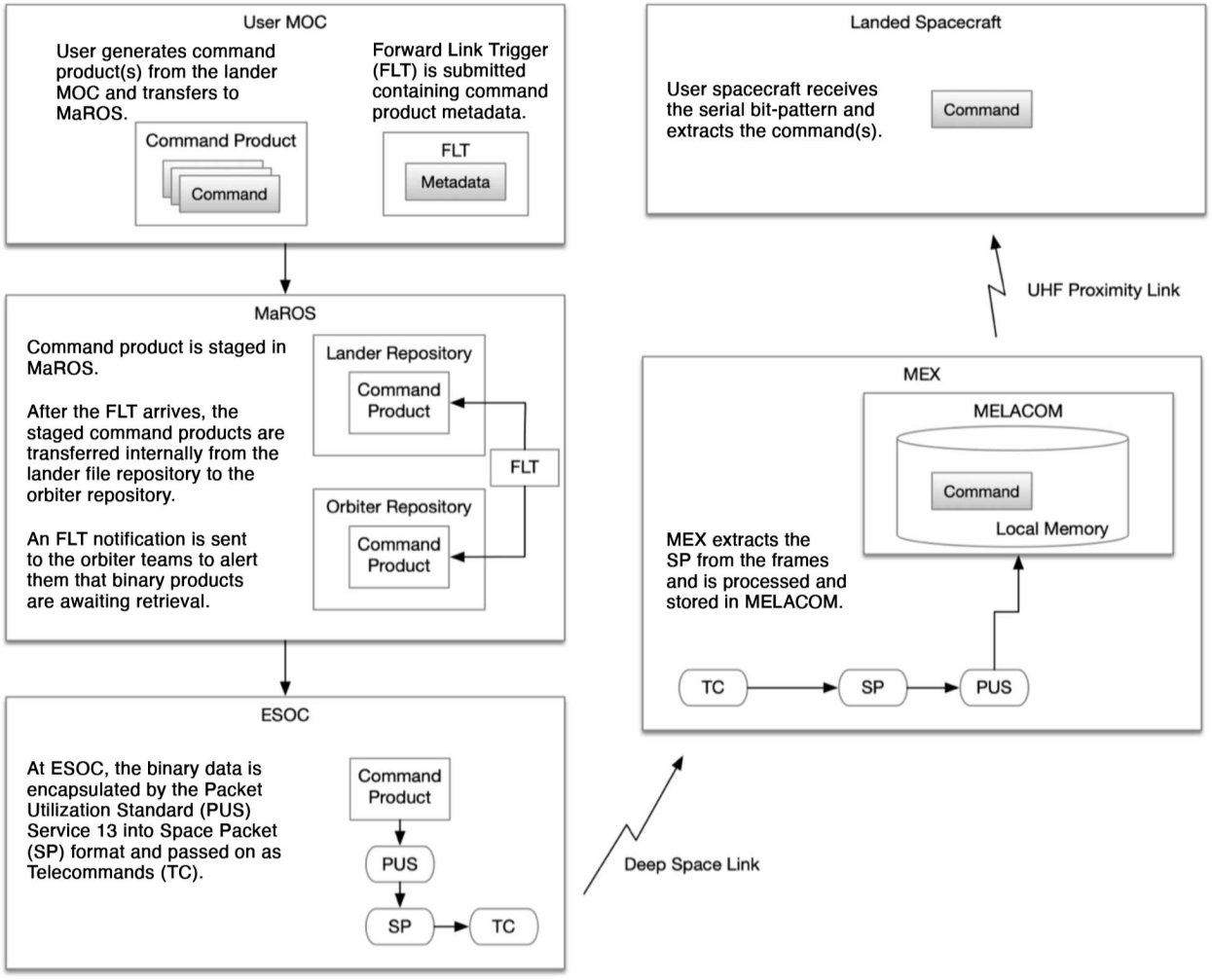

Figure 3-17: MEX forward-link command data flow.

3.2.7 *Idiosyncrasies and Limitations*

1. MEX clock recovery fails with long string of 1s (ones) or 0s (zeros)

[28] This automation is in place for MEX but has not yet been exercised in Test or Ops scenarios.

a. **Mode**: Reliable

b. **Link**: Return, Forward

c. **Description**: Clock recovery fails if MEX receives a long string (more than 2000 bits) of consecutive 1s or consecutive 0s. The link does not recover, and the link becomes stuck in both directions since the sync marker is not found and/or Cyclic Redundancy Code (CRC) is not decoded.

d. **Effect**: Loss of communications opportunity when problem occurs—if MEX is used in the operation, the user project should make sure that return-link data from the surface does not contain long strings of 1s or 0s.

2. MEX can acquire on subcarrier at 8 kbps

   a. **Mode**: Reliable

   b. **Link**: Return, Forward

   c. **Description**: If MEX sweeps over 5 sec, it may lock up on data subcarrier. User project should verify that their return-links switch from carrier-only to modulated carrier within the MEX sweep interval.

   d. **Effect**: Loss of communication opportunity when problem occurs. The MER project requested MEX to change carrier acquisition parameters for their return-link.

3. MEX return-link inefficient at 128 kbps

   a. **Mode**: Reliable

   b. **Link**: Return

   c. **Description**: The Proximity-1 frame size was not optimized between MEX and MER for all data rates. At 128 kbps, the frame size of 1024 bytes can be shorter in time than the frame size in the forward-link. The frame size in the forward-link depends on the source packet containing the user spacecraft commands but is typically greater than 200 bytes.

   d. **Effect**: User projects should be aware of this problem, which happened with MER, and adjust their frame sizes for compatibility and efficiency for operations with MEX.

3.2.8 *Reference Documents*

ESA's Mars Express Mission – Europe on Its Way to Mars, ESA Bulletin 98, June 1999.

Mars Express, ESA website, https://sci.esa.int/web/mars-express (accessed 11 February 2026, site under review and not being updated).

Mars Express Orbiter – Mars Exploration Rover Relay Link Interface Control Document, JPL D-21280, MER 420-3-524.1, Jet Propulsion Laboratory, California Institute of Technology, Pasadena, CA, 13 December 2002.

Mars Express Space/Ground Interface Control Document, ESA Volume: RF & Communications, ME-ESC-IF-5001, Issue 4.3, 15 April 2003.

Mars-Express Support to MSL EDL and Curiosity On-Surface Operations, Interface Control Document and Ops Concept, Ref. MEX-ESC-TN-5175, Issue 01 Rev. 0, 28 June 2012.

Mars Mission Protocol Profiles—Purpose and Rationale, *CCSDS Report Concerning Space System Standards,* CCSDS Historical Document, Informational Report CCSDS 740.0-G-1, Green Book, July 2008.

MELACOM – NASA MER Telecommunication Compatibility Test Summary, Ref. MEX-DER-MEM-136, Issue 01, 10 February 2003.

MELACOM UHF Transponder for Mars Express User Manual, Ref. MEX-DER-TN-205, Issue 4.0, March 2012.

MELACOM Upgrade in Support of MSL – Verification and Validation Test Report, Ref. QINETIQ/TS/AS/TPN1101289, Issue 05, 25 May 2012.

MEX User's Manual, MEX-MMT-MA-1091, Issue 04 Rev. 0, 15 May 2003.

MSL & MEX Interoperability Test Report, Ref. QINETIQ/TS/AS/TSTR1200287, Issue 01, 25 May 2012.

Proximity-1 Space Link Protocol – Data Link Layer, *CCSDS Recommendation for Space Data System Standards,* CCSDS Recommended Standard CCSDS 211.0-B-6, Blue Book, Annex I, July 2020.

Reboud, O., et al. An interplanetary and interagency network–Lander communications at Mars. In *SpaceOps 2008 Conference*, p. 3536, May 2008.

Space Packet Protocol, *CCSDS Recommendation for Space Data System Standards,* CCSDS 133.0-B-2, Blue Book, June 2020.

3.3 MARS RECONNAISSANCE ORBITER

3.3.1 *Overview*

Launched in August 2005, the Mars Reconnaissance Orbiter (MRO) spacecraft entered Mars orbit in March 2006 and began its Primary Science Phase (PSP) in November 2006. The MRO project provided relay services for Phoenix in the summer of 2008 and the Mars Exploration Rover (MER) project through the last contacts in 2010 (Spirit), 2018 (Opportunity), and 2022 (InSight). The MRO project is also a primary relay service provider for the ongoing MSL rover (Curiosity), and the M2020 rover (Perseverance).

The MRO spacecraft is in its Extended Science Mission with both scientific and mission support objectives. The MRO spacecraft is in a near-polar orbit with an orbit period of less than two hours. Its orbit is slightly elliptical and Sun-synchronous with its periapsis frozen over the South Pole and a nominal ascending node orientation corresponding currently to a Local Mean Solar Time (LMST) of roughly 3:09 PM.

Relay services are provided by an Electra radio, whose activities are coordinated with those of several of MRO's science instruments. The Electra radio UHF antenna is mounted on the instrument deck, which is nadir-pointed during normal operations, but can be rolled (along

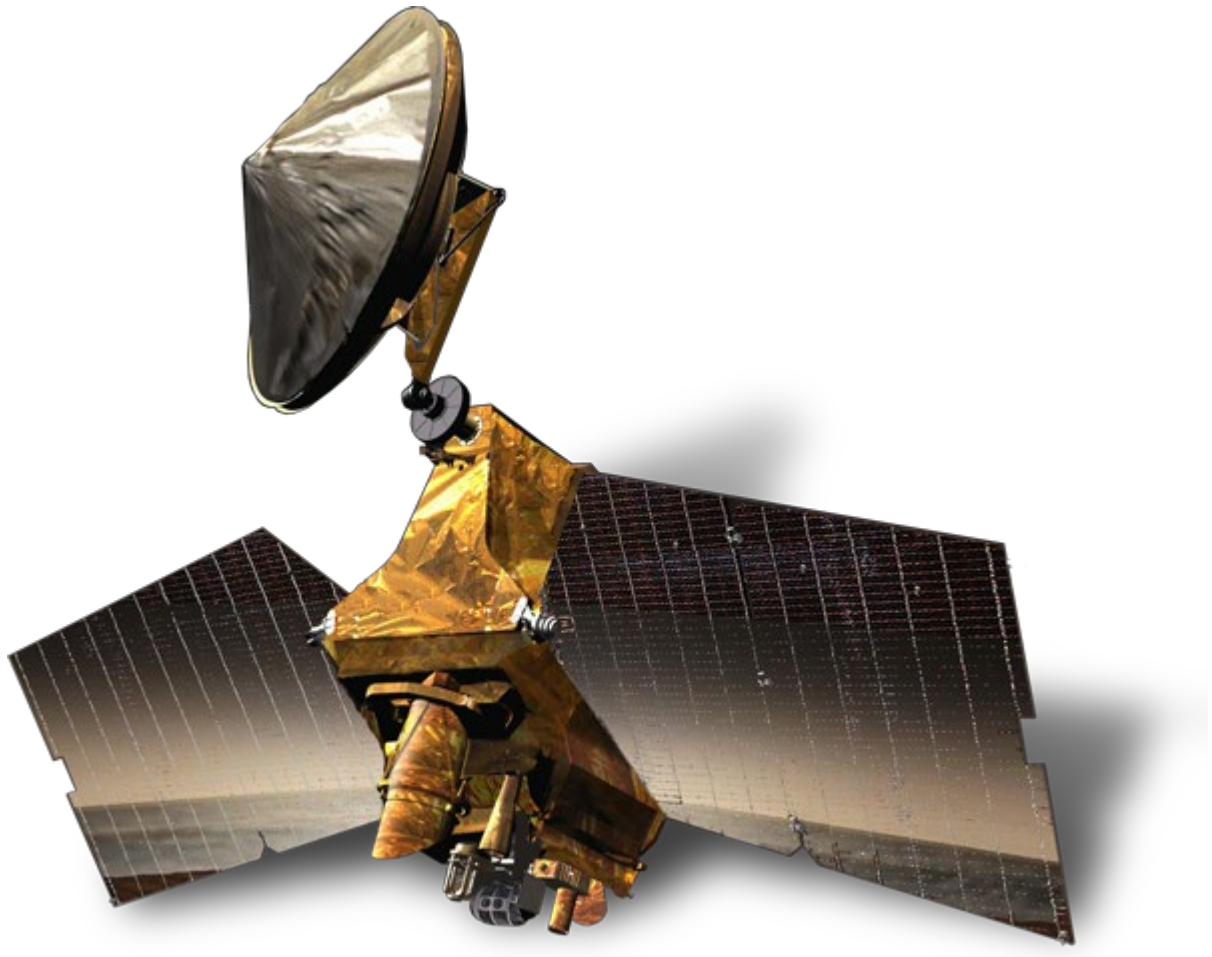

Figure 3-18: Mars Reconnaissance Orbiter.

with the spacecraft bus) to an offset of up to 30°, subject to spacecraft operational constraints, for science and/or relay purposes.

After the primary science mission, the orbiter began supporting the MEP by providing communications support to various Mars missions during navigation and relay. In general, MRO's orbit allows for relay access to any point on Mars. Low-latitude locations on Mars have contact opportunities at least twice per day, with more frequent contacts available at higher latitudes. Relay activities and other activities in support of newly arrived missions have highest priority during the relay phase. MRO and its navigation and telecommunications relay payload (including dual Electra radios and dual ultra-stable oscillators, used redundantly), can provide UHF coverage to Mars landers and rovers on the surface.

These orbital elements produce the following characteristics: a Sun-synchronous ascending node at 3.09 p.m. LMST (daylight equatorial crossing). The semi-major axis of the orbit was chosen to provide an approximate ground track repeat cycle of 17 days. A more detailed description of the primary science orbit (PSO) can be found in the Trajectory Characteristics Document (TCD, JPL D-22693). The orbital parameters (for epoch 29-JAN-2026) are provided in Table 3-11.

Table 3-11: MRO orbital parameters.

Mission Information	
Launch	August 12, 2005
MOI	March 10, 2006
Aerobraking	March to September, 2006
End of Prime Science Mission	December 31, 2008
End of Prime Mission Relay Phase	December 2010
Orbit Element	**MRO parameter value (mean)**
Periapsis Radium (km)	3629.6
Apoapsis Radium (km)	3697.7
Semi-major Axis (km)	3663.6
Eccentricity	0.00930
Inclination (deg)	92.6
Ascending Node (deg)	132.1
Argument of Periapsis (deg)	270.3
Time from Periapsis (sec)	-1172.8
Epoch	09-JAN-2026 00:00:00 Universal Time Coordinated (UTC)
Related Data	
Periapsis altitude / location	252 km / South pole
Apoapsis altitude / location	317 km / North pole
Local Mean Solar Time (LMST) ascending node	3:09 PM
LMST, descending node	3:09 AM
Orbit period	1 hr 52 min

(Mean Keplerian orbit elements, Mars-centered, Mars mean equator and Earth mean equator, reference epoch J2000, IAU 1991 Coordinate System)

3.3.2 *MRO UHF Transceiver and Antenna*

3.3.2.1 Transceiver

The Electra UHF Transceivers (EUTs) and Ultra-Stable Oscillators (USOs) are redundant.[29] There are restrictions on allowable combinations of use with the MRO C&DH subsystem, HiRISE, and solid-state recorder (SSR). For example, Electra, HiRISE and the SSR must be swapped together.

The block diagram for MRO relay communications is shown in Figure 3-19. The USOs are functionally cross-strapped such that each processor can use a clock signal from either USO. Additionally, both SDSTs and EUTs can receive the output of either USO, whichever one is powered. Both USOs cannot be powered simultaneously. MRO is currently configured with EUT A and USO B.

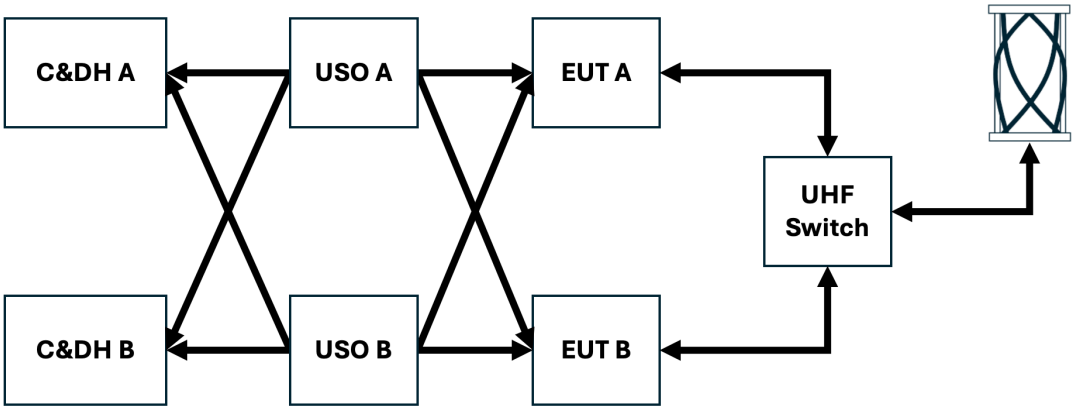

Figure 3-19: MRO relay communication system.

3.3.2.2 UHF Antenna

The Electra UHF antenna is a quadrifilar helix antenna based on the Mars ’01 and ’98 designs.

The MRO antenna directivity patterns are generated from measurements on the MRO spacecraft after launch using Stanford Research Institute ground station[30], as well as numerical simulations using the Method of Moments.

Figure 3-20 and Figure 3-21 show MRO UHF antenna gain patterns. Table 3-12 shows the losses that relate the gain and the directivity. The disparity in loss is because the antenna was optimized for use in the transmit frequency band for a different application.

[29] MRO launched on USO-1. Symptoms of X-band downlink degradation began in late 2017, and reduction in data volume of UHF return link from the Curiosity rover in 2018. MRO swapped to USO-2 in November 2018, a few weeks prior to the landing of InSight on Mars. Reference: *MRO Relay Throughput Anomaly Investigation Final Report,* JPL D-102990, 11 December 2018.

[30] *MRO/Stanford UHF Test Report*, JPL D-31161, B.W. Arnold, 23 February 2006.

Table 3-12: MRO UHF front end losses.

Loss Source	391.0 MHz (receive)	401.6 MHz (receive)	437.1 MHz (transmit)
Cables and Switch	0.36 dB	0.42 dB	0.44 dB
Antenna Hybrid Mismatch	3.60 dB	2.3 dB	0.32 dB
Connector, Feed, Arms	0.14 dB	0.20 dB	0.24 dB
Total Front End Loss	**4.10 dB**	**2.92 dB**	**1.00 dB**

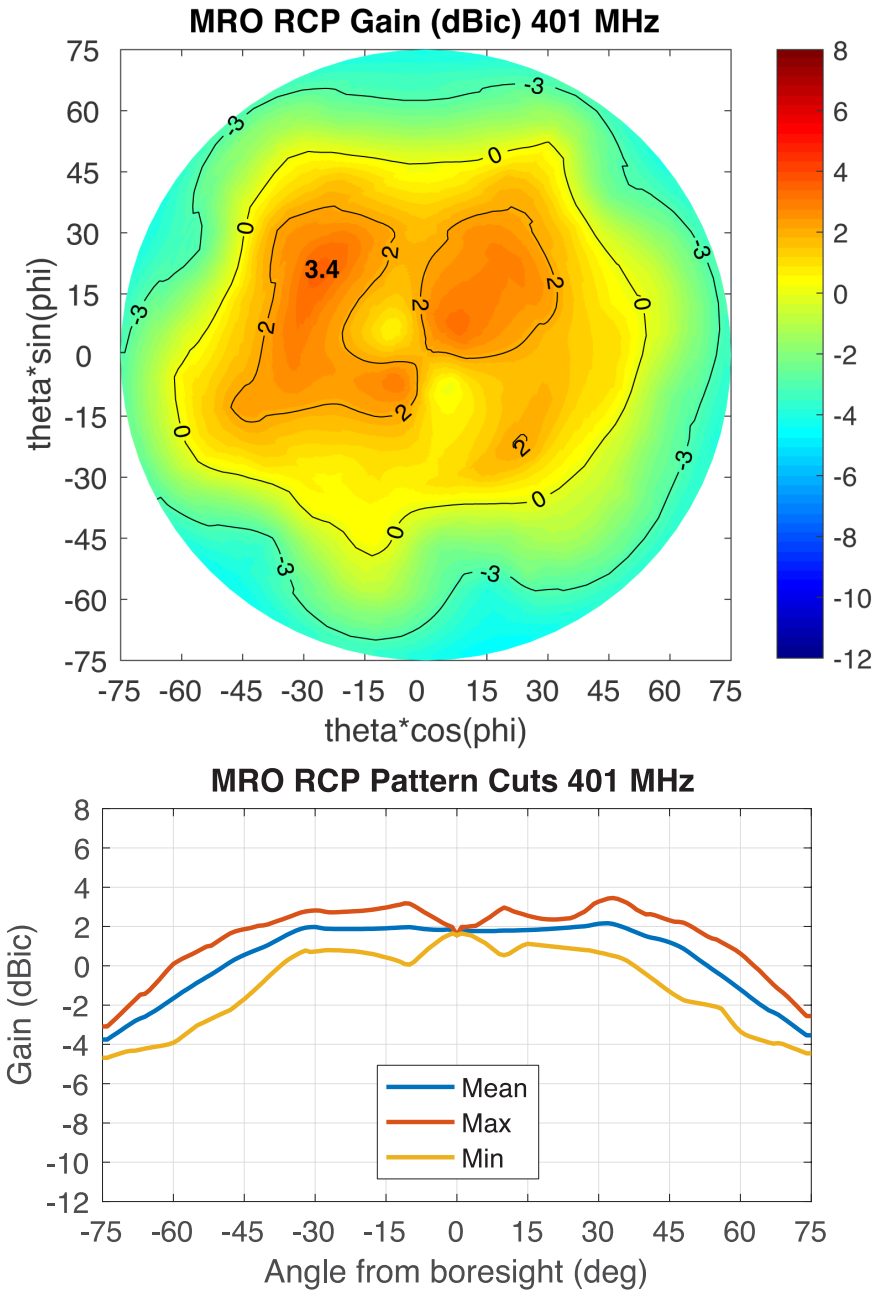

Figure 3-20: MRO UHF return-link patterns. *Upper:* 2D composite pattern. *Lower:* 1D pattern cuts.

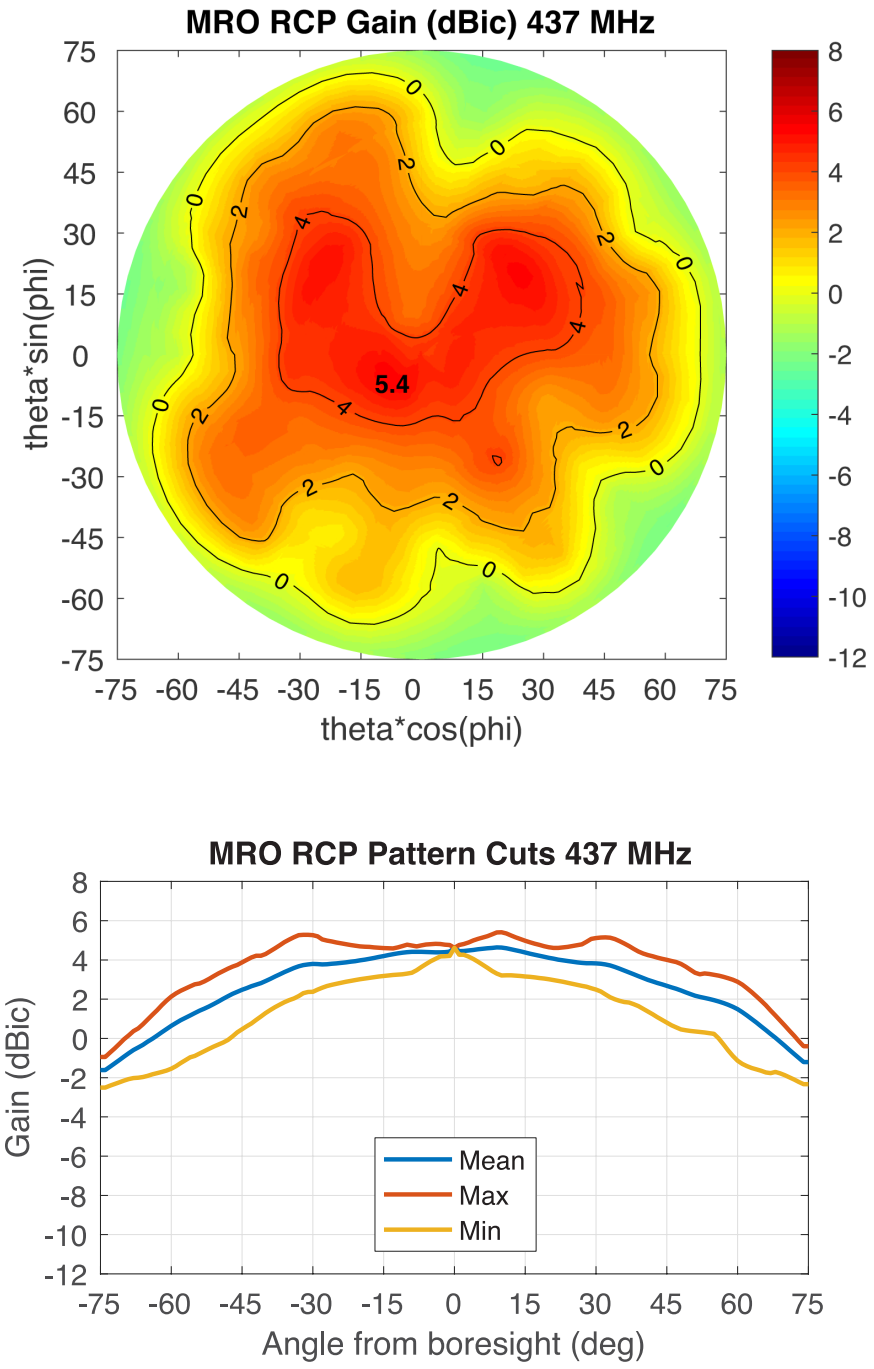

Figure 3-21: MRO UHF forward-link patterns. *Upper:* 2D composite pattern. *Lower:* 1D pattern cuts.

All pattern data are presented as right-hand circularly polarized (RCP) gain in units of dBic (decibels relative to an isotopic circularly polarized radiator). Losses from Table 3-12 have been subtracted from pattern data stored as directivity, namely 2.92 dB loss at 401 MHz and 0.94 dB at 437 MHz. Pattern data are presented in a coordinate system looking down to Mars

and oriented with spacecraft velocity vector pointing up-page, as though the spacecraft were flying south to north.

The color-scaled 2D patterns (presented in the downward looking coordinate system) represent the incident power distribution that would appear near the ground, as seen from orbiter, assuming the antenna were operating as a transmitting antenna. Viewing antenna pattern data in the native antenna coordinate system causes the patterns to flip left-to-right around the coordinate axis pointing in the velocity vector. In the 2D patterns, the global pattern maximum gain is indicated by a single boldface number.

The 1D pattern cuts were obtained by computing statistics (minimum gain, maximum gain, average gain) over azimuth (rotation around boresight) on the 2D pattern data. The 3 dB beamwidth is computed as the average gain across all azimuth angles and represents the full beam at −3 dB from boresight. For MRO, the 3 dB beamwidth is 120 deg at 401 MHz and 108 deg at 437 MHz.

3.3.3 *MRO UHF Services*

The MRO Electra Payload supports the following services:

- Forward- and return-link communications
- Doppler tracking for navigation
- Time correlation
- Open loop recording
- Bent-pipe service

Electra services are compatible with the Consultative Committee for Space Data Systems (CCSDS) Proximity-1 protocol. Table 3-13 provides detailed information on the RF services provided by MRO, which include communication, navigation and timing.

Simplex, Half-duplex, and Full-duplex modes are defined in Section 2.3.1. Half-duplex mode is not supported by MRO Electra. However, the radio is equipped with a half-duplex overlay, which allows the diplexer to be bypassed in simplex mode. Bypassing the diplexer in this manner reduces front end RF losses by 1.5 dB.

MRO has developed a *bent-pipe* capability, which is the ability to gather relay data and simultaneously return the data to Earth while the session is progressing, rather than waiting until the end of the session.[31] The demonstrated latency between receiving the rover data at MRO's UHF antenna and transmitting the data through MRO's X-band antenna was around 10 seconds. This capability was used during the EDL for Mars 2020 to relay data during the descent phase. This bent-pipe capability is also referred to as *pseudo bent-pipe* in some

[31] R. Gladden, et al, *Preparing the Mars Relay Network for the Arrival of the Perseverance Rover at Mars*, 2022 AIAA/IEEE Aerospace Conference, Big Sky, MT, March 2022.

documentation, meaning that the data transfer from UHF to X-band does not occur on a bit-by-bit basis, as it does with Odyssey.

Frequency usage is generally not compliant with the Prxomity-1 specification. For example, MRO Electra as well as the other Electras use Channel 0 for hailing instead of the specified Channel 1. An additional 8 channels are available per the specification through the Physical Layer Extensions directive, but these channels are not supported in MRO's relay pass block. It should also be noted that, of the eight frequency channels listed, only Channel 0 and Channel 2 have been used in practice. Additional verification may be required for relay services that require other channels. The Proximity-1 specification supports convolutionally-coded data rates of 1 kbps up to 2048 kbps. This full range of data rates is tested at "box level", but data rates below 8 kbps are not validated in testbed compatibility testing and are therefore not used in practice.

Table 3-13: MRO RF services.

Key Functions	Parameters	Additional Notes
Communications Services		
Proximity-1 Protocol	Reliable, Expedited, Bitstream	Expedited and Bitstream are unreliable modes
Mode of Operation	Full-Duplex, Simplex Tx, Simplex Rx	Half-Duplex mode not supported
Frequency Reference	76.72322224 MHz	Ultra-stable Oscillator
Frequency Pairs	Forward-Link / Return-Link	390–405 MHz Receive; 435–450 MHz Transmit
Channel 0	437.1 MHz / 401.585625 MHz	Used for hailing and main session
Channel 1	435.6 MHz / 404.4 MHz	Prox-1 Spec for hailing
Channel 2	437.1 MHz / 391.0 MHz	Prox-1 Spec: 439.2 MHz / 397.5 MHz
Channel 3	442.5 MHz / 392.0 MHz	Prox-1 Spec: 444.6 MHz / 393.9 MHz
Channel 4	443.0 MHz / 393.0 MHz	Prox-1 Spec: within 435–450 MHz / 390–405 MHz
Channel 5	437.1 MHz / 388.0 MHz	Prox-1 Spec: within 435–450 MHz / 390–405 MHz
Channel 6	437.1 MHz / 388.0 MHz	Prox-1 Spec: within 435–450 MHz / 390–405 MHz
Channel 7	437.1 MHz / 388.0 MHz	Prox-1 Spec: within 435–450 MHz / 390–405 MHz
Carrier Modes	Coherent, Non-Coherent	
Antenna Polarization	Right Circular Polarization (RCP)	
Transceiver Output Power	5.0 W Full-Duplex, 7.0 W Simplex	Simplex mode assumes half-duplex overlay
Receiver Input Power Range	−140 dBm to −70 dBm	
Acquisition and Tracking Loop	Second-order PLL, with loop bandwidth 10 Hz to 10 kHz	For received signal between −140 dBm and −70 dBm
Tracking Range	+/−20 kHz, +/−200 Hz/sec	
Scrambler	V.38	
Modulation	PCM-Bi-Phase-L Residual Carrier with Modulation Index of 60 deg (1.05 rad)	
	NRL-L Suppressed Carrier binary phase-shift keying (BPSK) Modulation	Improved performance may be obtained at rates of 512 kbps and above by using suppressed carrier.
Coding	Convolutional Coding Rate 1/2 with constraint length 7, G2 non-inverted	Can support G2-inverted for Landers not equipped with a scrambler
	Convolutional Decoding with 3-bit soft quantization	
	Bypass coding	If Lander does not support convolutional coding
Residual Carrier Forward-Link Data Rates (ADR not supported)	8 kbps, 32 kbps, 128 kbps, 256 kbps	Additional rates down to 1 kbps are available but have not been validated and/or implemented in relay pass block

Table 3-13: MRO RF services.

Key Functions	Parameters	Additional Notes
Communications Services		
Residual Carrier Return-Link Data Rates (ADR supported)	8 kbps, 16 kbps, 32 kbps, 64 kbps, 128 kbps, 256 kbps, 512 kbps, 1024 kbps	
Suppressed Carrier Return-Link Data Rates (ADR supported)	8 kbps, 16 kbps, 32 kbps, 64 kbps, 128 kbps, 256 kbps, 512 kbps, 1024 kbps, 2048 kbps	
Navigation, Time, and Other Services		
Navigation Services	1-way or 2-way phase (Doppler) and power measurement with time tags	2-way Doppler requires a Lander radio that can coherently turnaround forward-link signal)
Time Services	Time-stamp with 64-bit Electa time code	Time-stamps are derived by counting cycles of USO operating at 76.72322224 MHz, and are embedded in 128-bit Prox-1 transfer frames
Open Loop Recording, with options to time-stamp each block (standard) or each measurement (non-standard)	Spectral recording with 8-bit in-phase and quadrature (I&Q) samples at a rate of 76.72322224e6/($2^{(n+8)}$) samples/second	0 <= n <= 31 for time-stamps on each block 2 <= n <= 31 for time-stamps on each meas. ~150 kHz bandwidth

Proximity-1: The MRO EUT initiates a Proximity-1 session by sending a string of "hail" data packets while looking for a response from the specific lander identified in the hail packet. The hail includes information describing the session operating mode for both the forward- and return-link directions. This includes operating frequency, data rate, and channel coding mode.

In Proximity-1 reliable mode, data frames with bit errors are automatically detected and retransmitted via a standard Go-Back-N protocol scheme.

In Proximity-1 expedited mode, data frames with bit errors are discarded on the receive end. All that remains is a record of the data frame number missing from the frame sequence accounting.

The MRO EUT has several commandable timer settings that allow it to flywheel over short link dropouts or that force automatic link reacquisition after longer signal drop out periods. These functions are built into the MRO Electra Proximity-1 session management to maximize data return in a relay link environment with variable link performance.

Proximity-1 sessions onboard MRO are terminated by a timed, sequenced command.

Time Stamp Packets: Time stamp data consists of snapshots of the local Electra clock corresponding to the ingress or egress times of Proximity-1 Frame sync markers. Thus, time stamp data may only be collected in conjunction with Proximity-1 mode operations. The time stamps are paired with the corresponding Proximity-1 frame sequence numbers and noted as arriving or departing frames. These can be processed on the ground in conjunction with similar remote asset Proximity-1 time stamp data to achieve user-to-MRO Electra clock correlation.

The MRO EUT can time tag the trailing edge of the last bit of the attached frame sync marker of any incoming or outgoing Proximity-1 transfer frame to an accuracy of 60 nanoseconds root mean square (RMS) relative to the Electra clock.

Raw Data: In Raw data mode there is no hailing or link establishment protocol, nor is there any session data management or accounting protocol. A link is established by a timed, sequenced transmission and reception at both ends of the link. For example, the MRO orbiter could be sequenced to begin listening for a signal at time X and another vehicle could be sequenced to begin sending at time X + delta.

In addition to coordinated sequence timing, both sides of the link must agree beforehand to the same data link mode settings, such as frequencies, data rates, and coding.

While the raw data sent from the surface may have its own internal format, Electra and MRO know nothing of these native data structures and treat the received data as a continuous bit stream.

Phase & Power Data: MRO's EUT can sample and record phase signal power of a phase locked received carrier signal. This radiometric information is highly accurate on two accounts. First, the phase information is relative to the phase of the Electra USO signal with stability better than 1 part in 10^{-12}. Second, the capture of successive samples is tied directly to the USO-based local clock to achieve a highly stable inter-sample interval. In effect, this data forms the basis for a Doppler metric. Each sample contains phase, automatic gain control (AGC) power, I amplitude, Q amplitude, and a USO-based time tag.

The EUT has a minimum accumulated Doppler phase measurement interval of 1 second, with the capability to command the output rate to integer multiples of the minimum (5, 10, 20, 60 sec, etc.) The EUT can time tag the accumulated Doppler phase measurement with a minimum accuracy of 60 nanoseconds relative to the MRO spacecraft clock.

Open loop Data: Open loop data consists of high-rate in-phase and quadrature (I&Q) samples of the digital representation of the down-converted signal given a fixed receive center frequency and no closed loop signal tracking. It is required of the relay service user to specify a valid data collection rate, data collection filter bandwidth, and data collection center frequency to achieve the capture of the intended received signal bandwidth. The user may also specify a fixed receiver gain setting that effectively defines the peak-to-peak signal amplitude range into MRO or may enable the EUT's AGC to dynamically adjust the receive signal gain. The EUT provides 8 bits/sample for the I channel and the Q channel, corresponding to a signal level dynamic range of 51 dB. Available sampling rates range in powers of 2 from ~1.15 Hz to ~150 kHz. Data may be collected with or without time tags, though, for high sample frequencies, time stamps are usually only collected on the first five samples.

Table 3-14 provides receiver threshold for various MRO data rates. Measured performance is based on box-level testing *in the absence of EMI*, for a coded link using the MRO Electra (k=7,r=½) convolutional decoder with 3-bit soft quantization. The transceiver is in full-duplex configuration. Threshold is measured at the transceiver input at an effective bit error rate of 10^{-6}. The indicated data rate represents the information bit rate at the input to the encoder under laboratory temperature of 290 K. Actual throughput, e.g., user data bits per second, is lower due to link layer overheads such as the Proximity-1 Link Layer header, and the efficiency of the go-back-N ARQ algorithm that is operating point dependent.

Table 3-14: MRO receiver thresholds (dBm).

Data Rate	Residual Carrier – Uncoded	Residual Carrier – Coded	Suppressed Carrier – Uncoded	Suppressed Carrier – Coded
1 kbps	–128.03	–133.2		
2 kbps	–125.03	–130.2		
4 kbps	–122.03	–127.1		
8 kbps	–119.03	–124.1		
16 kbps	–116.03	–121.1		
32 kbps	–113.03	–118.1	–114.23	–119.3
64 kbps	–110.03	–115.1	–111.22	–116.3
128 kbps	–107.03	–112.1	–108.21	–113.3
256 kbps	–104.03	–109.1	–105.02	–110.3
512 kbps		–105.6	–101.88	–106.9
1024 kbps		–101.9	–98.58	–102.9
2048 kbps		NA	–95.58	–99.3

It is reiterated that these thresholds do not include potential performance impacts due to Electromagnetic Interference (EMI) from MRO science instruments. See Section 3.3.7 for a discussion of the impact of EMI.

The MRO EUT output power is 5 W for full-duplex mode and 7 W with half-duplex overlay enabled.

The MRO EUT has the capability to tune its Tx and Rx frequency across the entire 390 MHz to 450 MHz band. For full-duplex operation, the Tx frequency must be chosen in the range of 435 MHz to 450 MHz, and the Rx frequency must be chosen in the range of 390 to 405 MHz.

The EUT also supports an adaptive data rate (ADR) selection capability. The ADR process and algorithm are described more fully in Section 2.3.1.2. In ADR, the EUT monitors the symbol signal-to-noise-ratio (SSNR) on the return-link from the lander throughout the relay session and based on the measured SSNR value, sends directives to the lander spacecraft to raise or lower its transmit rate by a factor of 2, allowing the lander to always operate at the optimal data rate. This feature is used routinely in MRO's relay support to the MSL and M2020 rovers. The current ADR implementation effectively raises the data rate by a factor of two when the link margin grows to more than 3 dB above the current data rate threshold and lowers the data rate by a factor of two when the link margin becomes negative relative to the current data rate threshold. At each data rate change, there is a short gap of up to 5 sec to allow the link to re-acquire at the new rate; the reliable CCSDS Proximity-1 Link Protocol ensures that no data are lost due to this gap.

3.3.4 *MRO - MSL UHF Link Budgets (Design Control Tables)*

These link budgets are derived from predicts originally produced by JPL's Generalized Telecom Predictor (GTP) tool. Calculation is for a single time instance in a representative fixed rate MRO - MSL relay pass with 3 dB margin. For ADR passes, it is customary to have a policy margin of 0 dB. See Appendix A for a description of calculations.

Table 3-15: MRO-MSL link budget .

SPACECRAFT		MRO - MSL	
Link Type		Forward	Return
Modulation		Residual	Suppressed
Modulation Index	radian	1.047	1.571
Data Rate	kbps	32	32
Frequency	MHz	437.1	391.0
GEOMETRY DATA			
MSL - MRO Elevation	deg	6.0	6.0
MSL - MRO Azimuth	deg	275.0	275.0
MRO Boresight Offpoint	deg	67.2	67.2
MRO Boresight Clock	deg	273.0	273.0
MSL Boresight Offpoint	deg	84.0	84.0
MSL Boresight Clock	deg	312.0	312.0
TRANSMITTER PARAMETERS			
1. Transmitter Power	dBm	37.5	39.5
2. Circuit Loss	dB	-0.9	-1.7
3. Antenna Gain	dBic	-0.5	-1.1
4. EIRP	dBic	36.1	36.7
PATH PARAMETERS			
5. Range	km	1088.0	1088.0
6. Space Loss	dB	-146.0	-145.0
7. Polarization Loss	dB	-2.0	-2.1
8. Atmospheric and Multipath Loss	dB	0.0	0.0
9. Sky Temperature	K	190.0	190.0
RECEIVE PARAMETERS			
10. Antenna Gain	dBi	-0.5	1.0
11. Circuit Loss	dB	-3.3	-4.10
12. Total Received Power	dBm	-115.6	-113.5
13. Reference Temperature	K	293.0	293.0
14. Noise Figure	dB	1.4	3.0
15. System Noise Temperature	K	354.2	544.1
16. Noise Spectral Density	dBm/Hz	-173.1	-171.2
17. Total Power to Noise Density Pr/No	dB-Hz	57.5	57.7
TELEMETRY PERFORMANCE			
18. Residual Carrier Loss	dB	-1.25	0.00
19. Total Data Power	dB	-116.9	-113.5
20. Data Power to Noise Density Pd/No	dB-Hz	56.2	57.7
21. Data Rate	dB/Hz	45.1	45.1
22. System Losses(SysLoss)	dB	-0.6	-3.5
23. Eb/No	dB	10.6	9.2
DATA RATE AND LINK MARGIN			
24. Eb/No Threshold	dB	5.7	5.7
25. Margin Policy	dB	3.0	3.0
26. Eb/No Margin	dB	4.9	3.5
27. Theoretical Max Rate (no margin)	kbps	32	64
28. Available Max Rate	kbps	256	2048

ANTENNA PATTERNS

MSL: mslRHCP_391.dat; mslLHCP_391.dat; mslRHCP_437.dat; mslLHCP_437.dat

MRO: mroRHCP_401.dat; mroLHCP_401.dat; mroRHCP_437.dat; mroLHCP_437.dat

Note: MRO patterns for 391 MHz not available – 401 MHz used instead.

3.3.5 *RF Deep-Space Link Services*

MRO utilizes a very capable deep space telecommunications link, to return the large data volume generated by its science instrument suite. The link is with the DSN stations at standard X-band frequencies for uplink and downlink. The high X-band downlink data rate reduces the time to transmit the return-link relay data to Earth. MRO is capable of downlinking to the DSN on Ka-band, but this capability has not been used since early in the mission due to failure of one of the Ka-band exciters (swapping to the redundant exciter was deemed too risky).

The telecommunications subsystem, shown in Figure 3-22 is used for receiving commands and radiometric data and for transmitting radiometric data, science data, and engineering data back to the Earth. The spacecraft telecommunication system includes the following:

- Two Small Deep Space Transponders (SDSTs) supporting X-band and Ka-band
- Two Ultra-stable Oscillators (USOs)
- Two 100-W X-band Traveling Wave Tube Amplifiers (TWTAs)
- Two X-band Low Gain Antennas (LGAs)
- One Articulated 3 m X-band HGA with integrated Ka-band feed
- One 35 W Ka-band TWTA

MRO's inclusion of USOs goes back to an X-band gravity science experiment that required a USO. In 2018, the USOs were swapped due to deterioration in the performance of USO1. Currently, USO2 is being used for both X-band and UHF. In the event that USO2 fails or deteriorates, resumption of use of USO1 is possible, albeit with degraded performance.

The MRO telecom system communicates with the DSN via X-band (nominal) with the return-link data rate profile shown in Figure 3-23. The rate shown is the *frame bit rate*, before channel coding is applied. The 2006–2008 date range as shown can be extended to date ranges in the future because the profiles repeat about every 26 months as Earth and Mars move in their relatively circular orbits. The diagram shows a maximum frame bit rate of 3500 kbps (equivalent to a channel rate of 4 Msps with R-S coding only) designed to prevent interference with other flight projects. However, this constraint no longer exists.

The MRO spacecraft is designed to provide an X-band downlink data rate of at least 500 kbps at maximum range (2.67 AU). MRO has a variety of coding schemes available to maximize the rate capability at a particular range. The coding options available are Reed-Solomon (R-S) only, R-S plus convolutional code (k = 7, rate 1/2), Turbo code rate 1/2, Turbo code rate 1/3, and Turbo code rate 1/6.

With a 34 m DSN station, downlink data rates range from 650 kbps to 2600 kbps. With a 70 m station, data rates range from 1750 to 5220 kbps, the latter corresponding to a maximum channel rate of 6 Msps with R-S coding only.

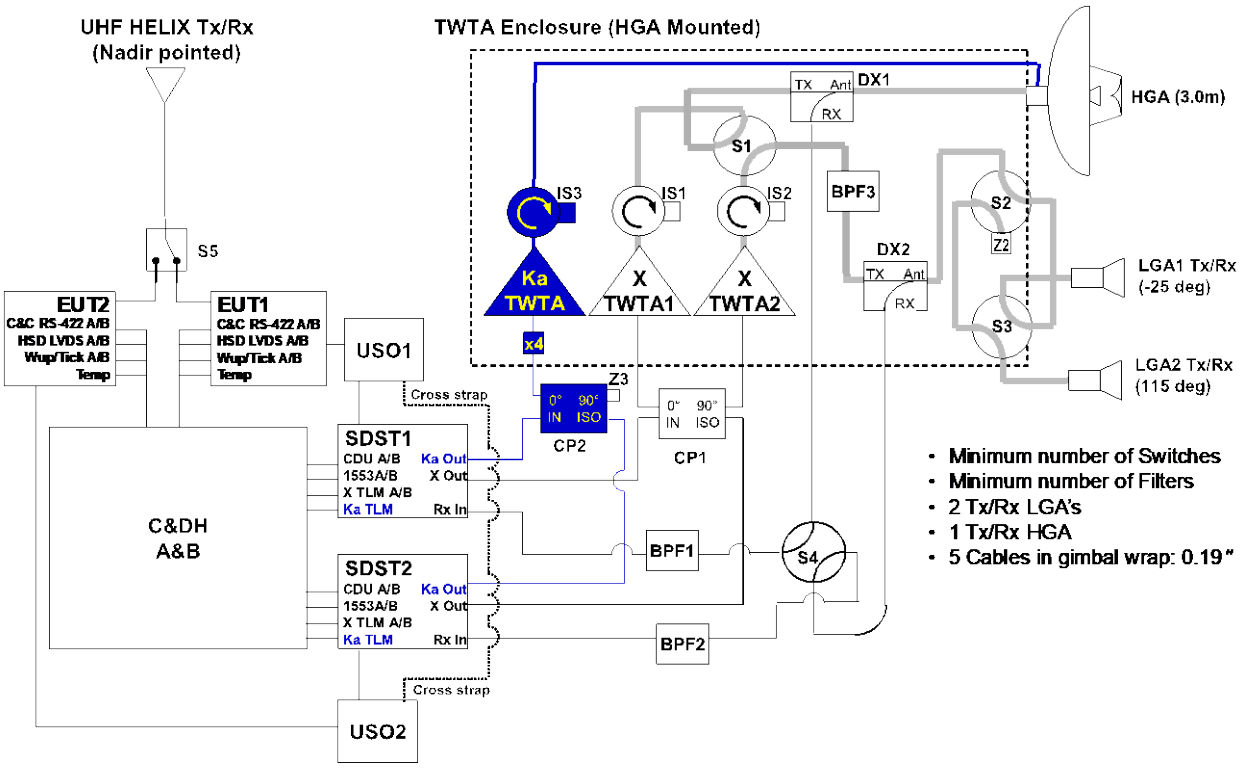

Figure 3-22: MRO UHF and X-band block diagram.

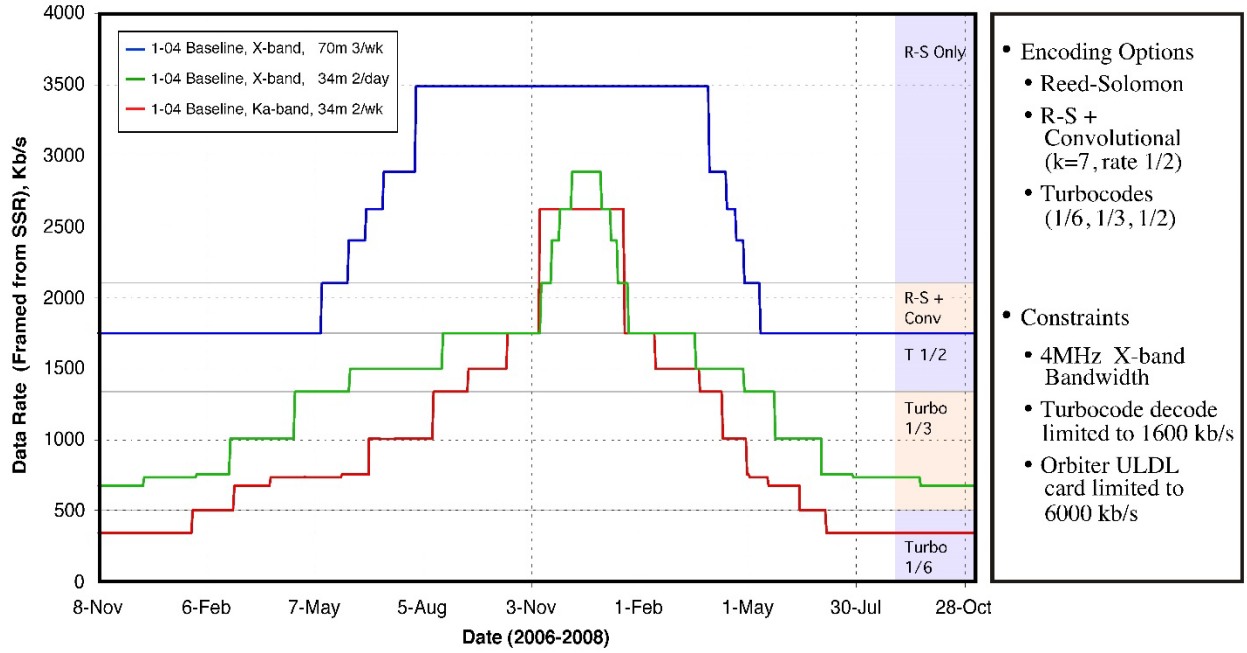

Figure 3-23: MRO X-band data rates to DSN.

3.3.6 *End-to-end Data Flow and Network Services*

MRO provides end-to-end relay service between user GDS and user spacecraft in both the forward- and return-link directions. In the forward-link direction, MRO relays commands generated by the user MOCs to their user spacecraft. In the return-link direction, MRO delivers telemetry, timing, and Doppler relay products to the user GDSs with a high degree of reliability by implementing a retransmission procedure over its deep-space link. This retransmission process allows MRO to recover lost or corrupted advanced orbiting systems (AOS) frames that may contain relay user's data. However, this does not mean that MRO can guarantee end-to-end data integrity and completeness under off-nominal conditions such as buffer overflow, entering safe mode, or system reset.

In the event of a retransmission, MRO automatically resends all relay data and Mars Climate Sounder (MCS) data. Additionally, there is a ground-based process at the DSN that detects lost frames. Ground processes read the lost frame reports and generate a retransmission command. The retransmission commands are sent up by the MRO ACE[32] during the next uplink window; so, there is a human involved in reviewing this process. Occasionally, manual intervention is needed to adjust the command. For example, during periods of operating at high data rate, the data may be written over onboard before it can be retransmitted. Sometimes data is written over within as few as eight hours, although relay data, having its separate buffer space, can usually be buffered for a much longer period.

CCSDS File Delivery Protocol (CFDP) is used by ground processes to assemble the whole of the Electra-generated relay data product, but it is not used by the MRO spacecraft when constructing retransmission commands, which instead is based on the detection of missing frames (not CFDP protocol data units (PDUs)). The Electra CFDP PDUs can span across frame boundaries, so a retransmission at the frame level from the MRO spacecraft would necessarily complicate the CFDP reconstruction process on the ground – this is something that the DSN has learned to work with successfully. Even though CFDP itself supports a retransmission scheme for missing PDUs, this isn't supported by MRO.

It should be noted that since the retransmission of relay products over the Deep-Space link requires two-way handshaking, delays in ground processing, generation and radiation of retransmission commands, and spacecraft avionics must be factored into consideration when estimating the end-to-end latency of complete relay product delivery. Partial relay products can be delivered before the retransmission process is completed so that missions have immediate access to data needed for science and operational planning. However, it should be noted that when relay products are partially delivered, it is the user's responsibility for parsing the received data set to identify the missing pieces of data.

3.3.6.1 Return-Link End-to-End Data Flow from a User Spacecraft on Mars, to MRO, to Earth

Figure 3-24 illustrates the end-to-end data flow of relay products through MRO. Electra can generate several different data products based on the set up and configuration commanded from the MRO Flight System. The CFDP identifies a set of PDUs for packaging the contents of a file. All relay products from MRO are encapsulated in a series of MRO frames, packets, and

[32] The term "ACE" is the call-sign of the real-time project representative on the voice net with the DSN.

PDUs. Therefore, they require ground processing to remove the CFDP headers and produce the final relay products. These products include:

- Proximity-1 Relay Data Product
- Raw Relay Data Product
- Open loop Data Product
- Time Service Data Product
- Phase and Power (Radiometric) Data Product

The MRO/Lander and MRO/Earth data flows both utilize CFDP. For each of the above relay products, PDUs are encapsulated twice as part of the CFDP protocol. The term “relay pass product” is used generically to refer to the outer-most wrapped product transferred from MRO to Earth. On the ground, a double-unwrap process is performed to reassemble the various data products. The process for the most common relay product is described in more detail.

The Proximity-1 relay data product is the demodulated data transmitted from the Lander and received by the MRO EUT. One product is generated for each relay session. Received return-link data are managed as unformatted octets of data and are encapsulated in relay data CFDP PDUs. These MRO PDUs are processed on the ground to produce the Proximity-1 relay data product which contains the data sent by the Lander. The MRO PDUs are not seen by the Lander operators but are used to identify missing data, retransmit if necessary, and reconstruct the relay product on the ground.

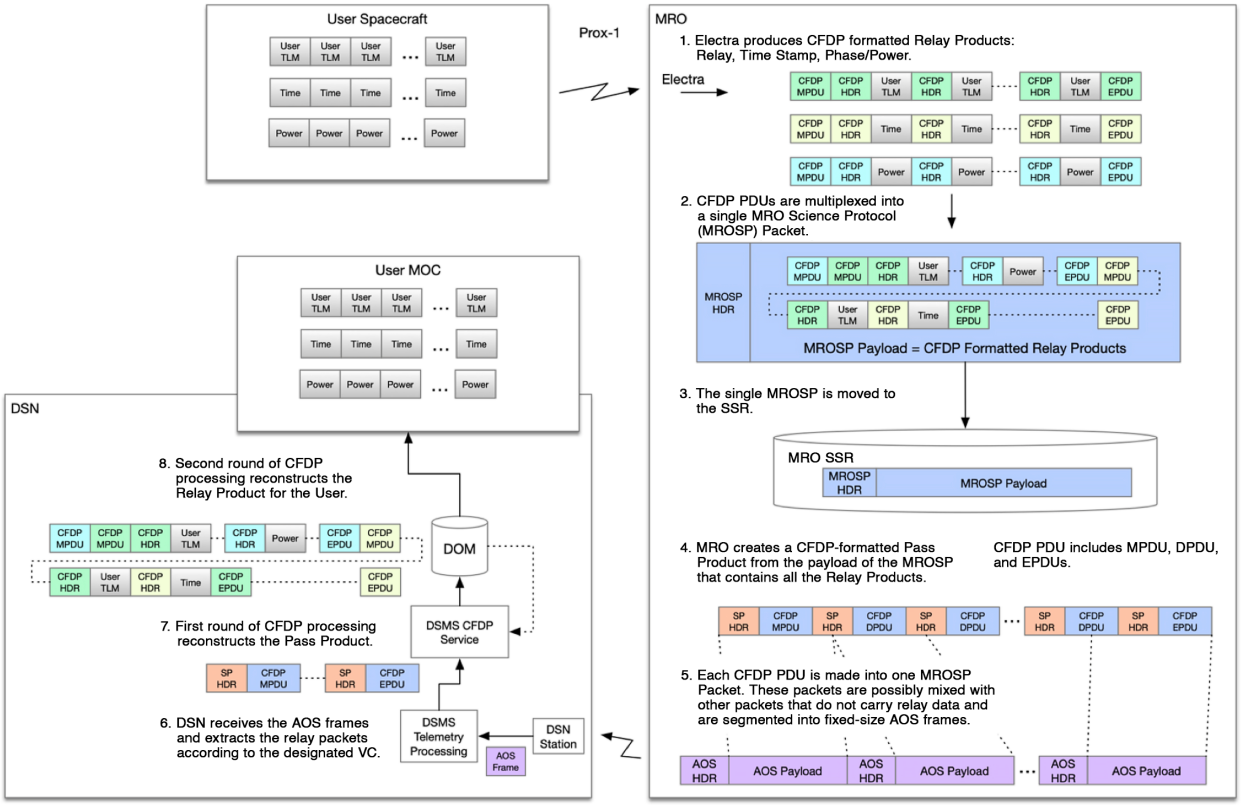

Figure 3-24: MRO return-link telemetry data flow.

3.3.6.2 End-to-End Forward-Link Data Flow from Earth, to MRO, to a User Spacecraft on Mars

The forward-link commanding process for MRO as shown in Figure 3-25 is similar to ODY in that it begins with the user MOC generating and submitting the command products to MaROS. The binary files are named appropriately and delivered to the collection within the distributed object manager (DOM) that corresponds to the type of forward-link being employed. A file release form (FRF) is also delivered using the metadata supplied by the forward-link trigger (FLT).

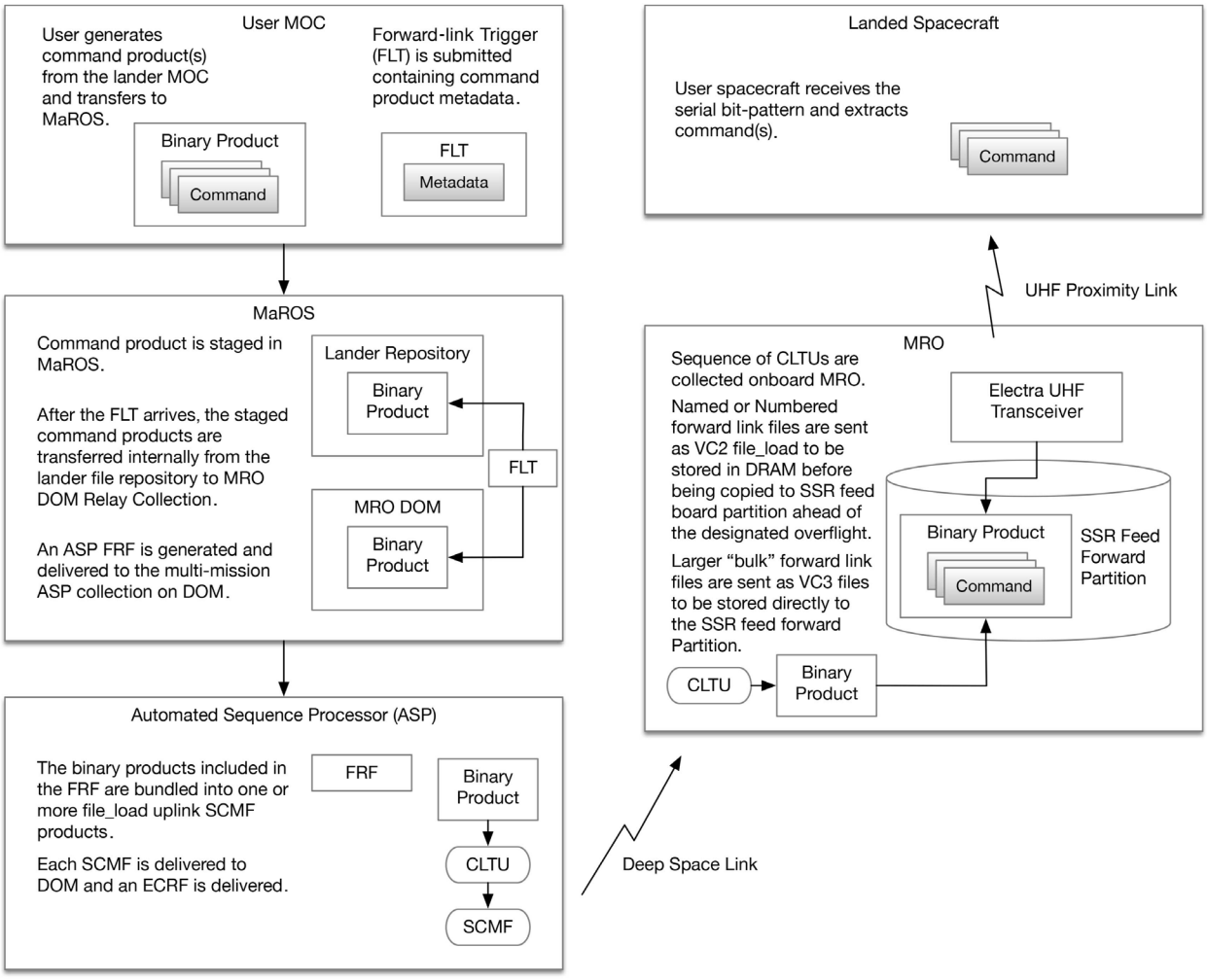

Figure 3-25: MRO forward-Link command end-to-end data flow.

Three forward-link paths are available for use with MRO, and each is supported as distinct forward-link types in MaROS:

- Numbered
- Named

- Bulk

The most common type is referred to as a Numbered forward-link, which supports multiple binary file loads to be placed into the SSR feed-forward partition ahead of a specific relay session in numbered order. Twenty files up to 64 K each can be submitted to utilize this path.

Users can also submit a forward-link binary to be sent on *every* forward-link enabled relay session using the Named forward-link path; so called because the file must have a particular name on-board to be placed into the SSR feed-forward partition ahead of *each* forward-link-enabled relay session. In MRO uplink parlance, both types of file loads utilize the typical “VC2 file_load” method for transferring files into the onboard volatile memory (DRAM).

The “VC3 file_load” path allows file_loads larger than the 64 K DRAM limit to be passed directly into the SSR feed-forward partition and is available to users via the Bulk forward-link path in MaROS. Since this path “pre-loads” the SSR feed-forward partition, the data here is sent first when any forward-link enabled relay session executes. For this reason, coordination is required to ensure that the bitstream is only put on board prior to the intended relay session and after any others.

All overhead additions and data formatting needed to transmit the command package(s) via Electra from MRO to the Lander is done by Electra on MRO and undone by the UHF system on the Lander. Hence, the data stream routed from the C&DH to the UHF system on MRO should be identical to the data stream routed from the UHF system to the command handling subsystem on the Lander. Once routed to the command handling subsystem on the Lander the data stream should be treated exactly as if it were received directly from Earth via X-band transmission. This data stream should match the Lander SCMF contents as originally created.

3.3.6.3 Multi-lander Coordination

MRO can only communicate with one Lander at a time. For relay service user missions in close proximity on the surface of Mars, relay sessions must be coordinated across the network. This is further complicated by the implementation of the CCSDS Proximity-1 protocol, which specifies that hailing activities always occur on Channel 0, as previously discussed. Thus, even though MRO can communicate with spacecraft on different channels, relay sessions by MRO and other orbiting assets must be coordinated to prevent frequency cross-talk during the relay sessions.

However, MRO does provide the ability to split relay services between two user spacecraft provided the two Landers are in close enough proximity to each other to share a view from MRO. For example, the Curiosity rover and InSight lander, which are at two different landing sites, were visible by MRO at the same time during relay opportunities. Thus, the Curiosity and InSight projects could coordinate on sharing the available common view period (with an MRO-mandated, short cycle time[33]) to obtain UHF communications sessions for each of them in a serial fashion. The coordination process for split passes with MRO is defined in the MRO Relay Data and Operations Interface Control Document (ICD).

[33] The scheduled gap from the end of the first session to the beginning of the second session is required to be at least two minutes. The gap is needed to tear down the first session and to set up the MRO Electra for the second session.

3.3.7 *Idiosyncrasies, Limitations, and Other Notes*

Several of the MRO science instruments generate radiated emissions in the Electra UHF receive band, which lead to degradation in the Electra receive thresholds. The EMI impact to Electra performance was observed to be ~7 dB degradation in link threshold for the 8 k, 32 k, and 128 k coded return-link data rates utilized supporting the Phoenix Lander in 2008, the Opportunity rover through 2018, and the InSight lander through 2022; all of which operated or operate at a fixed return-link frequency of 401.585626 MHz (Channel 0 in the Proximity-1 specification).

Among the more egregious sources of EMI, the Compact Reconnaissance Imaging Spectrometer for Mars (CRISM) instrument on MRO produced large interfering tones, one of which was at 400 MHz, which is 1.5 MHz below the center frequency of the Proximity-1 Channel 0. To mitigate the effect of this tone, Electra was updated post-launch with a digital filter to allow relay on Channel 0. To further mitigate the impact of CRISM, the instrument was placed in a quiescent state during relay. CRISM was permanently switched off in May 2023.

The MSL (Curiosity) and M2020 (Perseverance) rovers utilize an Electra-Lite Transceiver (ELT) that can select a return-link channel anywhere in the range 390–405 MHz. Prior to Curiosity's arrival at Mars, in-flight tests on MRO were conducted to quantify EMI impacts across this frequency band. Based on these tests and prior to the Curiosity landing in 2012 and the Perseverance landing in 2021, both projects have chosen to operate at a return-link frequency of 391.0 MHz (Channel 2),[34] at which the EMI degradation is reduced to ~3 dB.

For special short-term events, such as critical events or support of a user spacecraft for its first few sols on the surface, MRO can power off the science instruments that are the primary sources of EMI. In this configuration, where HiRISE remains on, MRO recommends that relay service users still include 1 dB of EMI degradation to account for possible low-level spurious signals generated by the spacecraft avionics.

MRO now operates nominal day-to-day relay in "Relay Quiet" mode, which includes quiescent states for the SHARAD and MCS instruments. EMI degradation in MRO's current mode of operation is quantified primarily through empirical analysis of flight data returns. Following the decommissioning of CRISM, MRO performed approximately 80 passes with M2020 and 23 passes with MSL on Channel 0, with approximately 90 passes on Channel 2 in the same timeframe for comparison. From the M2020 passes alone (there was an insufficient number of MSL passes to draw meaningful conclusions), it is estimated that Channel 2 has a 3% performance advantage over Channel 0 (or 0.13 dB). While the EMI is lower on Channel 2, front end losses are significantly higher, resulting in roughly the same performance on Channel 2 as Channel 0. Performance degradation is summarized in Table 3-16.

[34] Use of 391.0 MHz for Channel 2 by MSL is a deviation from the CCSDS Blue Book, Prox-1 Protocol, Physical Layer.

Table 3-16: MRO UHF system losses.[35]

Loss Source	391.0 MHz (Ch2 Receive)	401.6 MHz (Ch 0 Receive)
Front End Loss	-4.10 dB	-2.92 dB
Diplexer Loss	-	-0.12 dB
Antenna Directivity	-	0.93 dB
Space Loss	-	-0.23 dB
EMI Loss	-3.00 dB	-4.89 dB
Total	**-7.10 dB**	**-7.23 dB**

In comparison with TGO (for example), which has front end loss and EMI loss totaling 1.0 dB, MRO has approximately 6 dB more loss, which is equivalent to reducing the received power by one quarter. However, TGO does not relay four times as much data as MRO because it has a higher orbit and because of the data rate cap of 2048 kbps (for MSL passes, TGO's throughput on a per pass basis is approximately 215% of MRO's).

3.3.7.1 MRO Forward-Link Commanding Behavior

a. **Link:** Forward

b. **Description:** It was observed during MSL software upload in early 2013 that MRO will forward-link any BULK (aka VC3, see Section 3.3.6.2) forward-link product on the next overflight of any Lander—regardless of which Lander the forward-link was actually intended.

c. **Effect:** *After* MRO receives a UHF forward-link command over the deep-space link and *before* the next available UHF forward-link relay session for the intended Lander, there should not be any forward-link relay sessions scheduled with other Landers. Otherwise, they will receive the command. This constraint may introduce disruption to UHF operations for other user missions and reduce their science return. There is only one feed-forward partition in the SSR and, since the VC3 path stages large files directly to this partition, it is essentially spoken for at the time of the VC3 uplink.

d. **Mitigation:** Fragment large command file into smaller packages that can be uploaded from Earth just prior to UHF forward-link relay sessions with the intended Lander. Lander may be required to reassemble the packages to reconstruct the original command load. Due to occultations and other uplink constraints, ~20 min uplinks are preferred anyway. The Bulk file size limit in MaROS (as of early 2021) is 260000 bytes in conformity.

3.3.8 *Reference Documents*

B. Arnold, *MRO/Stanford UHF Test Report,* JPL D-31161, Jet Propulsion Laboratory, California Institute of Technology, Pasadena, CA, 23 February 2006.

D. Bell, *A Brief History of MRO UHF EMI Issues,* JPL IOM# 337-DJB-20090504-047, Jet Propulsion Laboratory, California Institute of Technology, Pasadena, CA, 15 May 2009.

[35] For items with no entry at 391 MHz, loss at 401.6 MHz is expressed relative to 391 MHz.

D. Bell, et. al., *MRO Relay Telecom Support of Mars Science Laboratory Surface Operations,* 2013 AIAA/IEEE Aerospace Conference, Big Sky, MT, March 2013.

C. Edwards, *Updated Information on Orbit States of NASA Relay Orbiters for Telecommunications Support of the InSight Lander and EMTGO EDM,* JPL IOM# 6060-CDE-13-001, Jet Propulsion Laboratory, California Institute of Technology, Pasadena, CA, 01 February 2013.

C. Edwards, M. Shihabi, D. Bell, C. Lee, *Assessments of EMI Impacts on MRO Receiver Thresholds,* JPL IOM# TGO-640-003-14, Jet Propulsion Laboratory, California Institute of Technology, Pasadena, CA, 27 August 2014.

R. Gladden, N. Chamberlain, M. Shihabi, S. Huh, and B. Waggoner, *Mars Reconnaissance Orbiter (MRO) Relay Throughput Anomaly Investigation Final Report,* JPL D-102990, Jet Propulsion Laboratory, California Institute of Technology, Pasadena, CA, 11 December 2018.

Mars Reconnaissance Orbiter Mission Plan, MRO 31-201, JPL D-22239, January 2005.

Mars Reconnaissance Orbiter Specification for Product Telemetry CFDP, MRO-37-582, JPL D-24901, Jet Propulsion Laboratory, California Institute of Technology, Pasadena, CA, April 2003.

Mars Relay Description for Discovery 2019 Proposals, Mars Exploration Program, Proposers' Guide, Jet Propulsion Laboratory, California Institute of Technology, Pasadena, CA, 10 April 2019.

MRO Relay Throughput Anomaly Investigation Final Report, JPL D-102990, Jet Propulsion Laboratory, California Institute of Technology, Pasadena, CA, 11 December 2018.

MRO Telecom Design Control Document, MRO-26-591, JPL D-22724, Jet Propulsion Laboratory, California Institute of Technology, Pasadena, CA, 17 November 2003.

3.4 EXOMARS TRACE GAS ORBITER

3.4.1 *Overview*

The European Space Agency (ESA) has established the ExoMars program, consisting of a series of missions exploring the Mars environment and demonstrating technologies in preparation for a future Mars sample return mission. The first element in this program is the 2016 ExoMars/Trace Gas Orbiter (in this handbook, TGO for short), consisting of an ESA-provided orbiter bus, launched on a Russian Federal Space Agency (Roscosmos) launch vehicle, carrying a suite of ESA- and Roscosmos-provided science instruments, including investigations of trace gas constituents of the Mars atmosphere. For TGO, NASA provided a dual-string Electra Ultra High Frequency (UHF) Transceiver (EUT), with the Electra design effectively identical to the EUT on the now defunct Mars Atmosphere and Volatile Evolution (MAVEN) orbiter.

On approach to Mars in 2016, the primary spacecraft released an ESA-provided Entry, Descent, and Landing (EDL) Demonstrator Module (EDM), a short-lived lander named Schiaparelli which demonstrated EDL technologies applicable to future ExoMars landers. Although a multi-sol relay support plan was carefully orchestrated ahead of EDL, Schiaparelli failed to land gently and subsequently did not respond to any of the hail attempts from the relay network providers. Although the ExoMars/EDM is portrayed in Figure 3-26, it plays no further role in this handbook.

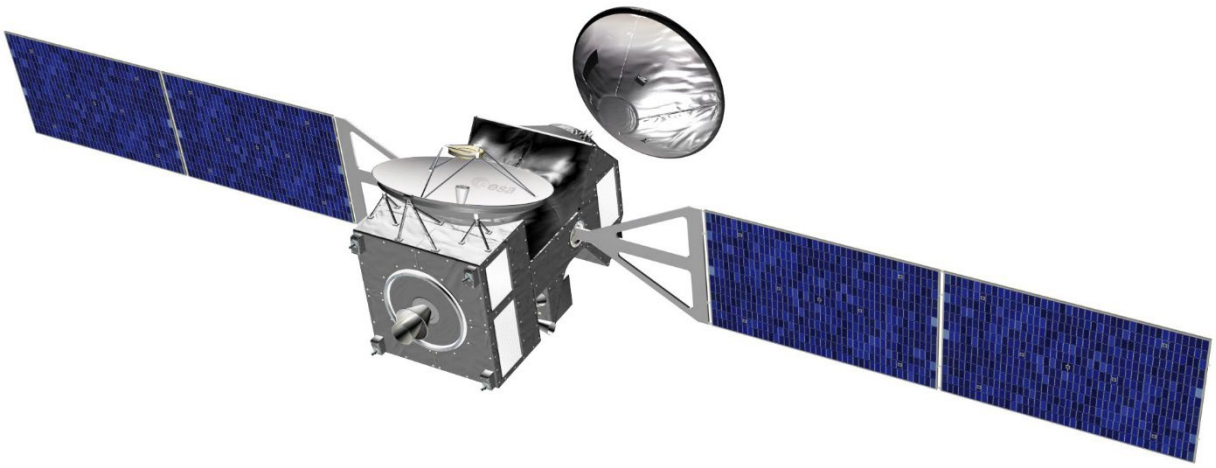

Figure 3-26: ExoMars / Trace Gas Orbiter.

TGO launched in March 2016 and went into orbit around Mars in October 2016. Upon completion of aerobraking, ExoMars/TGO was in a 400 km circular orbit with an inclination of 74° with orbital parameters as shown in Table 3-17. As desired by the mission's trace gas science objectives, this is a non-Sun-synchronous orbit, so the local time of the orbit node precesses, moving earlier each day, and thus the contact times for relay services drifts.

The orbit is summarized in Table 3-17, for an epoch of 24-Jan-2026.

Table 3-17: ExoMars/TGO orbit elements.

Mission Information	
Launch	March 14,2016
Mars Orbit Insertion	October 19, 2016
Aerobraking	March 2017 to February 2018
Science-Relay Mission Start	April 2018
Mission Funded Until	End of 2028
Orbit Element	**TGO**
Semi-major Axis (km)	3781.89
Eccentricity	0.0069
Inclination (deg)	75.9
Argument of Pericenter (deg)	267.33
Orbital Period (min)	117.91
Epoch (UTC)	24-JAN-2026 00:00:00

(Mean Keplerian orbit elements, Mars-centered, Mars mean equator and Earth mean equator, J2000, IAU 1991 Coordinate System)

3.4.2 *TGO UHF Transceiver and Antenna*

Figure 3-27 shows a functional block diagram of the Proximity communication system.

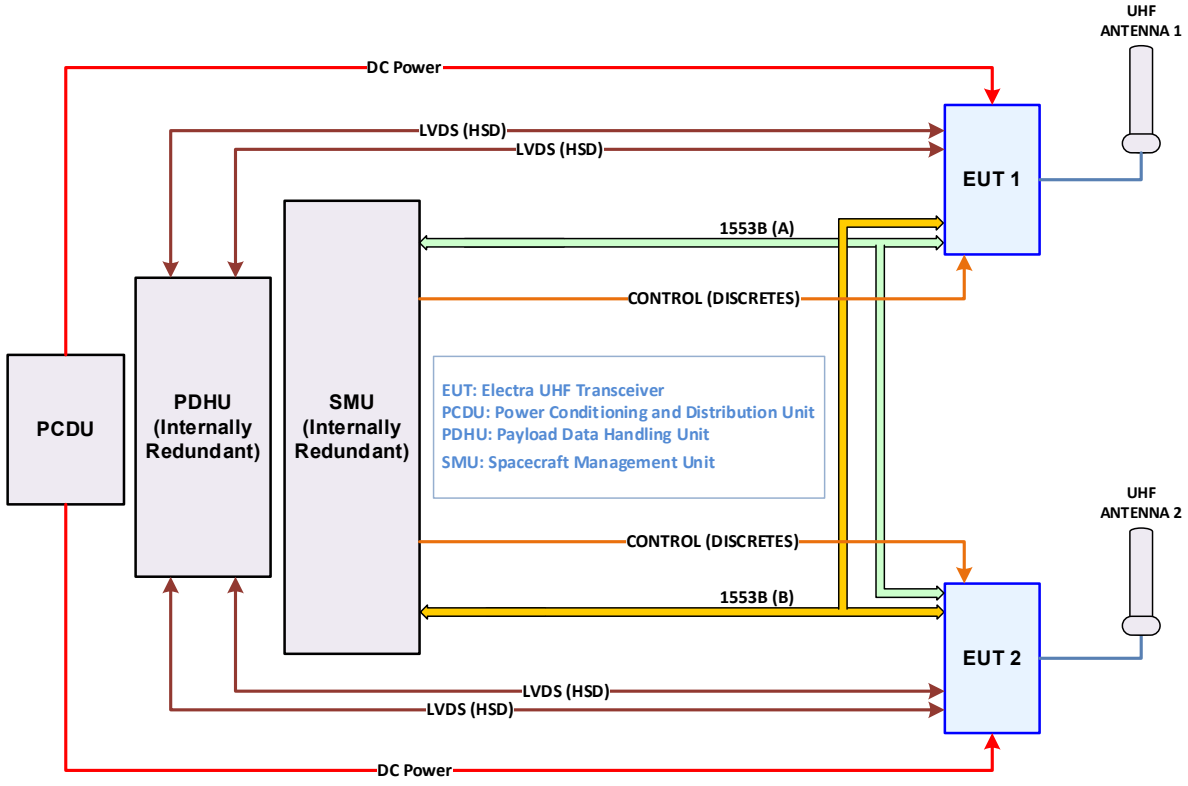

Figure 3-27: TGO proximity communication system.

3.4.2.1 UHF Transceiver

The TGO EUTs share a common design with the MAVEN EUT. This design was revised following lessons learned from the MSL Electra Lite Transceiver (ELT) and MRO EUTs. Some key differences between the TGO (and MAVEN) Electra design and the earlier MRO Electra are the use of an internal temperature-controlled crystal oscillator (TCXO) as a frequency reference in place of an external ultra-stable oscillator (USO). As a result, the 32.768 MHz clock rate on TGO differs significantly from the 76.723 MHz used on MRO, and the use of a TCXO versus a USO has implications for the frequency stability (as described by the Allan deviation) and radiometric sampling rate during open loop recording and phase/power measurements.

Another change from MRO is the use of an early/late gate tracking loop (ELGTL) in place of the previous digital data-transition tracking loop (DTTL). Finally, the updated TGO (and MAVEN) design features a new low-density parity-check (LDPC) encoder/decoder in addition to the existing convolutional encoder/decoder and uncoded options. The TGO EUT hardware differs from the other orbiters in various other ways, but the essential functionality, in terms of the supported radio and diagnostic modes, remains the same.

The TGO Electra Flight Software (FSW) is defined as the software running in the Payload Controller (PC) of the Electra Baseband Processor Module (BPM) of the EUT. This software is separate from the programmable logic found in the Modem Processor (MP), Housekeeper (HK), and High Speed Data (HSD) interface. An update to both the TGO Electra FSW and MP Firmware was executed Feb 2022. This update improves ADR performance with LDPC coding, eliminates the need for command pokes to address the suppressed carrier vulnerability of QinetiQ radios, and adds a CCSDS-compliant version of the LDPC encoder/decoder. This same update had already been applied to the MAVEN EUT.

The TGO Electra Command and Telemetry Dictionary[36] is a key document needed to control the EUTs and interpret their outputs. This includes the commands that are sent from the ground to the TGO spacecraft, as well as commands that are sent from the spacecraft to the EUTs.

Another useful reference is the TGO to NASA Relay User Interface Control Document (ICD)[37] which provides information on the EUT radio modes, return- and forward-link data flow and interfaces, and relay operations, the radio architecture, performance and operational interfaces.

3.4.2.2 UHF Antenna

TGO carries two quad-helix antennas, provided by ESA, and each connected to a EUT.

Figure 3-28 and Figure 3-29 show TGO UHF antenna gain patterns. The TGO measured pattern cuts were provided by ESA and synthesized into the 2D patterns. All pattern data are presented as right circularly polarized (RCP) gain in units of dBic (decibels relative to an isotopic circularly polarized radiator). Pattern data are presented in a coordinate system looking down to

[36] *TGO Electra Command and Telemetry Dictionary*, Revision G, JPL D-68145, Jet Propulsion Laboratory, California Institute of Technology, Pasadena, CA, 29 September 2016.

[37] *TGO to NASA Relay User ICD*, Olivier Reboud, Peter Schmitz, EXM-GS-ICD-ESC-00001, Revision 3.4, 26 November 2024. User missions requesting access to this document should contact Peter Schmitz (peter.schmitz@esa.int).

Mars and oriented with spacecraft velocity vector pointing up-page, as though the spacecraft were flying south to north.

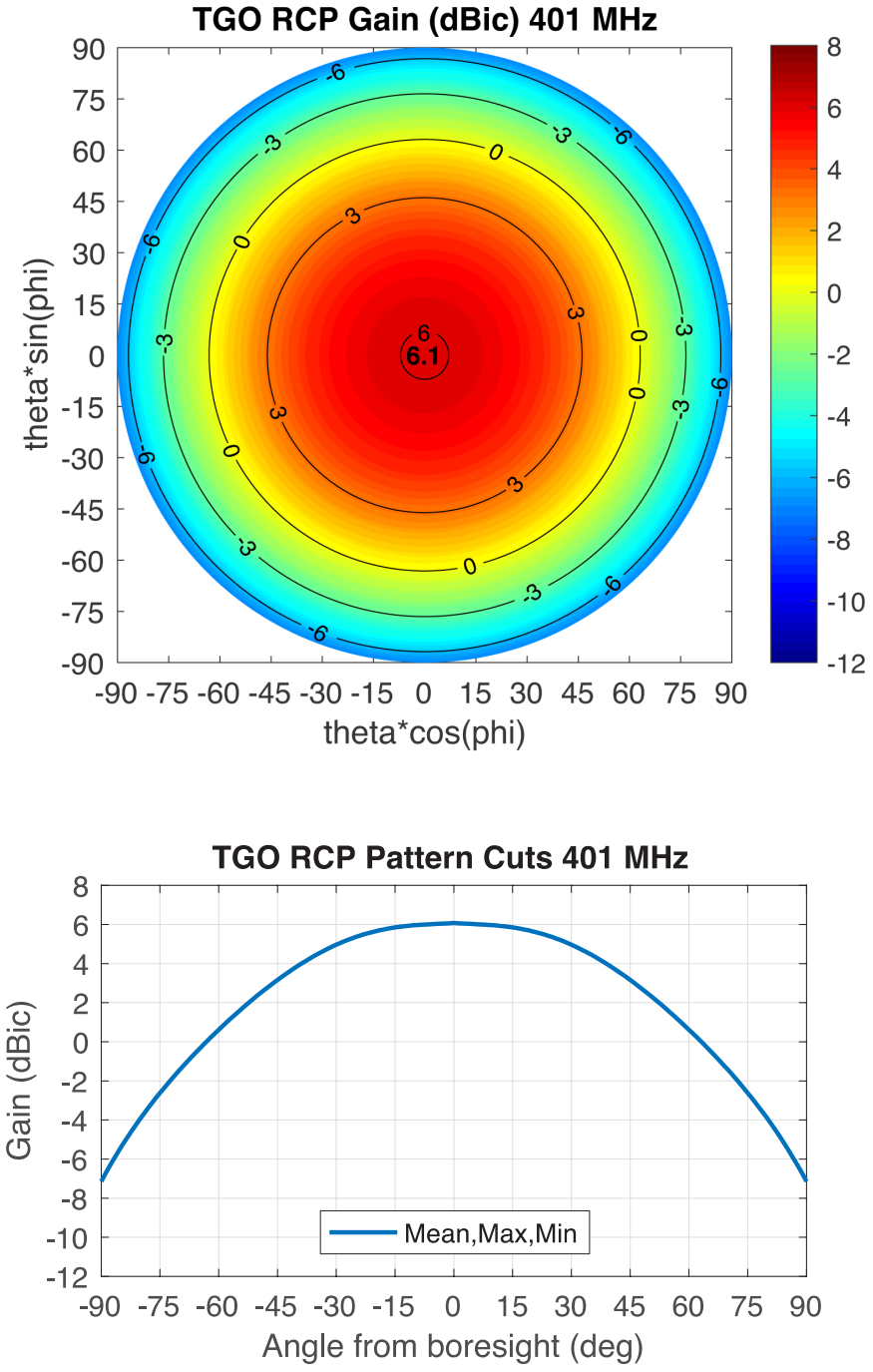

Figure 3-28: TGO UHF return-link patterns. *Upper:* 2D composite pattern. *Lower:* 1D pattern cut.

The color-scaled 2D patterns (presented in the downward looking coordinate system) represent the incident power distribution that would appear near the ground, as seen from the

orbiter, assuming the antenna were operating as a transmitting antenna. Viewing antenna pattern data in the native antenna coordinate system causes the patterns to flip left-to-right around the coordinate axis pointing in the velocity vector. In the 2D patterns, the global pattern maximum gain is indicated by a single boldface number.

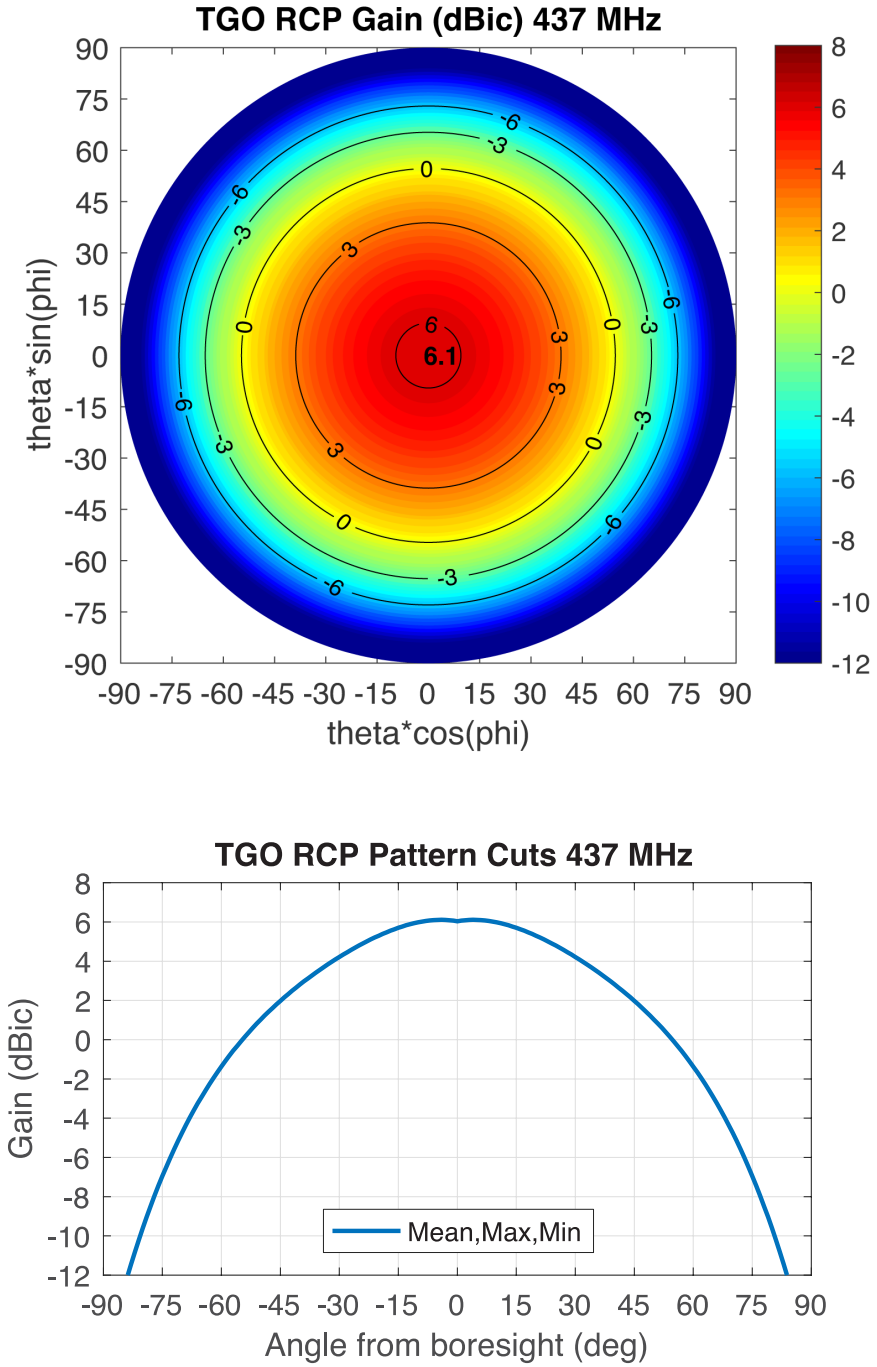

Figure 3-29: TGO UHF forward-link patterns. *Upper:* 2D composite pattern. *Lower:* 1D pattern cut.

The 3 dB beamwidth is computed as the average gain across all azimuth angles and represents the full beam at −3 dB from boresight. For TGO, the 3 dB beamwidth is 92 deg at 401 MHz and 78 deg at 437 MHz.

3.4.3 *RF Proximity Link Services*

The TGO Electra Payload supports the following services:

- Forward- and return-link communications
- Doppler tracking for navigation
- Time correlation
- Open loop recording

Electra services are compatible with the Consultative Committee for Space Data Systems (CCSDS) Proximity-1 protocol. Table 3-13 provides detailed information on the RF services provided by TGO, which include communication, navigation and timing.

Simplex, Half-duplex, and Full-duplex modes are defined in Section 2.3.1. Half-duplex mode is not supported by TGO Electra. However, the radio is equipped with a half-duplex overlay, which allows the diplexer to be bypassed in simplex mode. Bypassing the diplexer in this manner reduces front end RF losses by 1.5 dB.

Frequency usage is generally not compliant with the Prxomity-1 specification. For example, TGO Electra as well as the other Electras use Channel 0 for hailing instead of the specified Channel 1. An additional 8 channels are available per the specification through the Physical Layer Extensions directive, but these channels are not supported in TGO's relay sequencing. It should also be noted that, of the eight frequency channels listed, only Channel 0 and Channel 2 have been used in practice. Additional verification may be required for relay services that require other channels. The Proximity-1 specification supports convolutionally-coded data rates of 1 kbps up to 2048 kbps. This full range of data rates is tested at "box level", but data rates below 8 kbps are not validated in testbed compatibility testing and are therefore not used in practice.

TGO Electra supports low density parity check (LDPC) channel coding on the return link. LDPC coding provides up to approximately 3 dB improvement in coding gain compared to convolutional coding. Presently, only the Mars 2020 Perseverance rover is equipped to encode an LDPC data stream. In practice, data throughput improvements with LDPC channel coding are limited by various link parameters, including notably the maximum coded data rate of 2048 kbps supported by Electra. In a link that readily obtains 2048 kbps with convolutional coding (as is often the case in TGO relay passes with Mars 2020), LDPC coding does not significantly improve throughput. For example, for all TGO-M20 passes through 2025, the estimated coding gain improvement with LDPC is between 0.3 dB and 1.1 dB, depending on maximum pass elevation angle, with lower elevation angles seeing the best improvement. A lander with a lower RF output power (for example) would see higher throughput gains with LDPC channel coding.

Table 3-18: TGO RF services.

Key Functions	Parameters	Additional Notes
Communications Services		
Proximity-1 Protocol	Reliable, Expedited, Bitstream	Expedited and Bitstream are unreliable modes
Mode of Operation	Full-Duplex, Simplex Tx, Simplex Rx	Half-Duplex mode not supported
Frequency Reference	FM1 = 32.7679605 MHz, FM2 = 32.7680160 MHz	Internal temperature Controlled Crystal Oscillator (TCXO). Stability: ±10 ppm, end-of-life
Frequency Pairs	Forward-Link / Return-Link	390–405 MHz Receive; 435–450 MHz Transmit
Channel 0	437.1 MHz / 401.585625 MHz	Used for hailing and main session
Channel 1	435.6 MHz / 404.4 MHz	Prox-1 Spec for hailing
Channel 2	437.1 MHz / 391.0 MHz	Prox-1 Spec: 439.2 MHz / 397.5 MHz
Channel 3	442.5 MHz / 392.0 MHz	Prox-1 Spec: 444.6 MHz / 393.9 MHz
Channel 4	443.0 MHz / 393.0 MHz	Prox-1 Spec: within 435–450 MHz / 390–405 MHz
Channel 5	437.1 MHz / 388.0 MHz	Prox-1 Spec: within 435–450 MHz / 390–405 MHz
Channel 6	437.1 MHz / 388.0 MHz	Prox-1 Spec: within 435–450 MHz / 390–405 MHz
Channel 7	437.1 MHz / 388.0 MHz	Prox-1 Spec: within 435–450 MHz / 390–405 MHz
Carrier Modes	Coherent, Non-Coherent	
Antenna Polarization	Right Circular Polarization (RCP)	
Transceiver Output Power	5.0 W Full-Duplex, 7.0 W Simplex	Simplex mode assumes half-duplex overlay
Receiver Input Power Range	−140 dBm to −70 dBm	
Acquisition and Tracking Loop	Second-order PLL, with loop bandwidth 10 Hz to 10 kHz	For received signal between −140 dBm and −70 dBm
Tracking Range	+/−20 kHz, +/−200 Hz/sec	
Scrambler	V.38	
Modulation	PCM-Bi-Phase-L Residual Carrier with Modulation Index of 60 deg (1.05 rad)	
	NRL-L Suppressed Carrier binary phase-shift keying (BPSK) Modulation	
Coding	LDPC (k = 1024, r = 1/2)	Low Density Parity Check Code, return link only
	Convolutional Coding Rate 1/2 with constraint length 7, G2 non-inverted	Can support G2-inverted for Landers not equipped with a scrambler
	Convolutional Decoding with 3-bit soft quantization	
	Bypass coding	If Lander does not support convolutional coding
Residual Carrier Forward-Link Data Rates	8 kbps, 32 kbps, 128 kbps, 256 kbps	ADR not supported on forward-link Additional rates down to 1 kbps are available but have not been validated and/or implemented in relay pass block
Residual Carrier Return-Link Data Rates (ADR supported)	8 kbps, 16 kbps, 32 kbps, 64 kbps, 128 kbps, 256 kbps, 512 kbps, 1024 kbps	
Suppressed Carrier Return-Link Data Rates (ADR supported)	8 kbps, 16 kbps, 32 kbps, 64 kbps, 128 kbps, 256 kbps, 512 kbps, 1024 kbps, 2048 kbps	
Navigation, Time, and Other Services		
Navigation Services	1-way or 2-way phase (Doppler) and power measurement with time tags	2-way Doppler requires a Lander radio that can coherently turnaround forward-link signal)
Time Services	Time-stamp with 64-bit Electa time code	Time-stamps are derived by counting cycles of USO operating at 76.72322224 MHz, and are embedded in 128-bit Prox-1 transfer frames
Open Loop Recording, with options to time-stamp each block (standard) or each measurement (non-standard)	Spectral recording with 8-bit in-phase and quadrature (I&Q) samples at a rate of ~32.77e6/($2^{(n+8)}$) samples/second	0 <= n <= 31 for time-stamps on each block 2 <= n <= 31 for time-stamps on each meas. ~128 kHz bandwidth

Table 3-19 provides receiver threshold values for the TGO relay link. The thresholds are an amalgam of measurements and calculations at -20 C during box-level I&T, in the absence of EMI. The transceiver is in full-duplex configuration. Threshold is measured at the transceiver input at an effective bit error rate of 10^{-6}. The indicated data rate represents the information bit rate at the input to the encoder under laboratory temperature of 290 K. Actual throughput, e.g., user data bits per second, is lower due to link layer overheads such as the Proximity-1 Link Layer header, and the efficiency of the go-back-N ARQ algorithm that is operating point dependent.

Table 3-19: Typical in-flight Electra receive signal level threshold (dBm).

Data Rate (kbps)	Uncoded (Residual, MI=60 deg)	Convolutional K=7 R=1/2 (Residual, MI=60 deg)	LDPC (Residual, MI=60 deg)	Uncoded (Suppressed)	Convolutional K=7 R=1/2 (Suppressed)	LDPC (Suppressed)
1	–128.5	–134.0	–136.7	–130.0	–135.5	–138.3
2	–125.5	–131.0	–133.7	–127.1	–132.6	–135.3
4	–122.5	–128.0	–130.6	–124.1	–129.6	–132.3
8	–119.5	–125.0	–127.6	–121.1	–126.5	–129.3
16	–116.5	–122.0	–124.6	–118.1	–123.5	–126.3
32	–113.4	–118.9	–121.6	–115.0	–120.5	–123.2
64	–110.4	–115.9	–118.6	–112.0	–117.5	–120.2
128	–107.4	–112.9	–115.6	–109.0	–114.5	–117.2
256	–104.4	–109.9	–112.6	–106.0	–111.5	–114.2
512	–101.5	–106.9	–109.6	–103.0	–108.5	–111.2
1024	–98.5	–103.9	–106.4	–100.0	–105.5	–108.0
2048	–95.4	–100.8	–103.2	–96.9	–102.4	–104.8

3.4.4 *TGO – Perseverence UHF Link Budgets (Design Control Tables)*

These link budgets are derived from predicts originally produced by JPL's Generalized Telecom Predictor (GTP) tool. Calculation is for a single time instance in a representative fixed rate TGO – M20 relay pass with 3 dB margin. For ADR passes, it is customary to have a policy margin of 0 dB. See Appendix A for a description of calculations.

Table 3-20: TGO-M20 link budget.

SPACECRAFT		TGO - M20	
Link Type		Forward	Return
Modulation		Residual	Suppressed
Modulation Index	radian	1.047	1.571
Data Rate	kbps	32	2048
Frequency	MHz	437.1	401.6
GEOMETRY DATA			
M20 - TGO Elevation	deg	30.0	30.0
M20 - TGO Azimuth	deg	300.0	300.0
TGO Boresight Offpoint	deg	45.0	45.0
TGO Boresight Clock	deg	275.0	275.0
M20 Boresight Offpoint	deg	60.0	60.0
M20 Boresight Clock	deg	105.0	105.0
TRANSMITTER PARAMETERS			
1. Transmitter Power	dBm	37.6	39.5
2. Circuit Loss	dB	-0.9	-1.7
3. Antenna Gain	dBic	2.0	3.1
4. EIRP	dBic	38.7	40.9
PATH PARAMETERS			
5. Range	km	390.0	390.0
6. Space Loss	dB	-137.1	-136.3
7. Polarization Loss	dB	-0.2	-0.2
8. Atmospheric and Multipath Loss	dB	0.0	0.0
9. Sky Temperature (Tsky)	K	190.0	190.0
RECEIVE PARAMETERS			
10. Antenna Gain	dBi	1.8	3.0
11. Circuit Loss	dB	-3.3	-0.6
12. Total Received Power	dBm	-100.0	-93.3
13. Reference Temperature (Tref)	K	293.0	293.0
14. Noise Figure (NF)	dB	1.4	3.1
15. System Noise Temperature (Tsys)	K	354.2	509.9
16. Noise Spectral Density	dBm/Hz	-173.1	-171.5
17. Total Power to Noise Density	dB-Hz	73.1	78.3
TELEMETRY PERFORMANCE			
18. Residual Carrier Loss	dB	-1.25	0.00
19. Total Data Power	dB	-101.3	-93.3
20. Data Power to Noise Density Pd/No	dB-Hz	71.8	78.3
21. Data Rate	dB/Hz	45.1	63.1
22. System Losses(SysLoss)	dB	-0.6	-0.9
23. Eb/No	dB	26.2	14.2
DATA RATE AND LINK MARGIN			
24. Eb/No Threshold (SSNRt)	dB	5.7	2.7
25. Margin Policy	dB	3.0	3.0
26. Eb/No Margin	dB	20.5	11.5
27. Theoretical Max Rate (no margin)	kbps	1024	16384
28. Available Max Rate	kbps	256	2048

ANTENNA PATTERNS

M20: mslRHCP_401.dat; mslLHCP_401.dat; mslRHCP_437.dat; mslLHCP_437.dat

TGO: tgo_RCP_401.dat; tgo_LCP_401.dat; tgo_RCP_437.dat; tgo_LCP_437.dat

Note: Mars 2020 has the same UHF antenna as MSL with a similar deck configuration. Therefore, antenna patterns were not synthesized for Mars 2020 and instead MSL's antenna patterns are used for link budget calculations.

3.4.5 *RF Deep-Space Link Services*

TGO communicates to Earth via a 2.2-m high gain antenna (HGA) and a 65-W traveling wave tube amplifier (TWTA), enabling a downlink data rate of 150 kbps to a 35-m European Space Tracking Network (ESTRACK) antenna or a 34-m DSN antenna at maximum Earth–Mars distance. Uplink via the HGA is supported at up to 4 kbps.[38] Supported X-band data rates are shown in Figure 3-30.

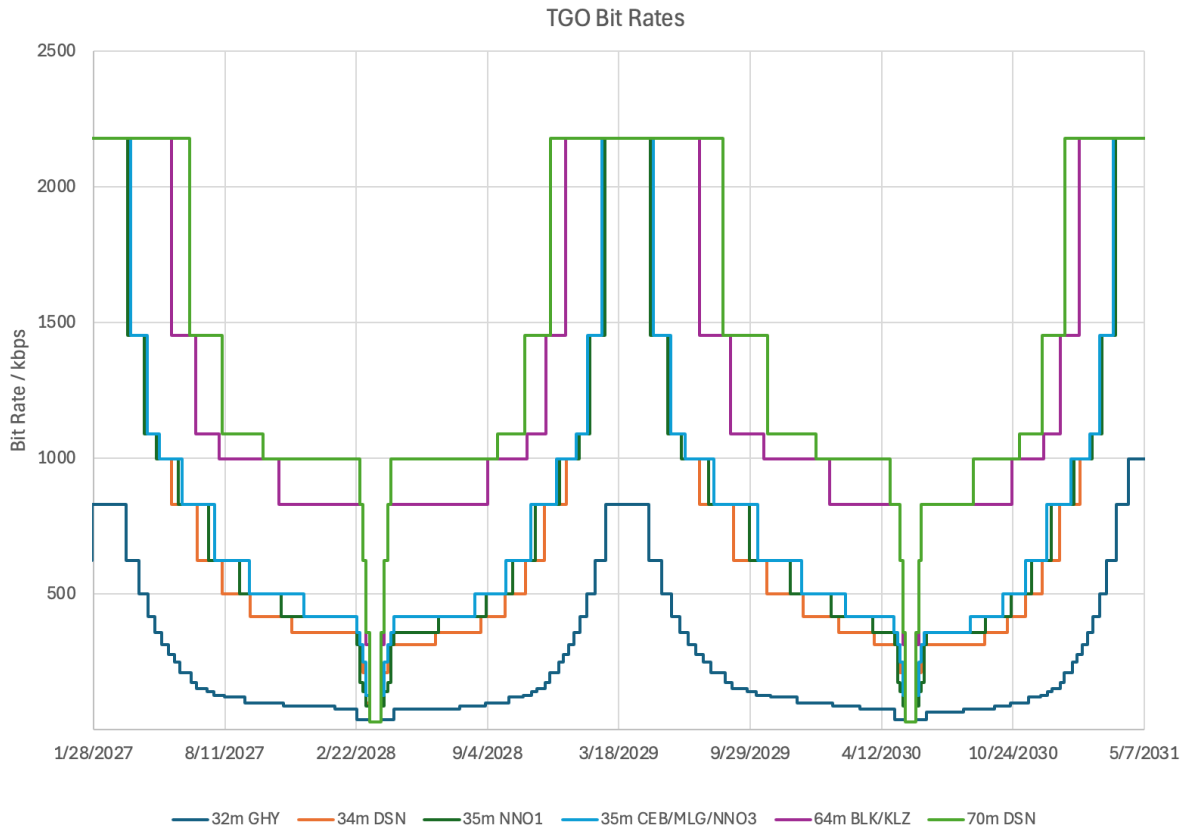

Figure 3-30

[38] The ESTRACK uplink rate capability is actually 4 kbps from the radio frequency (RF) perspective, but current data system limitations do not allow commands to be radiated faster than 2588 bps.

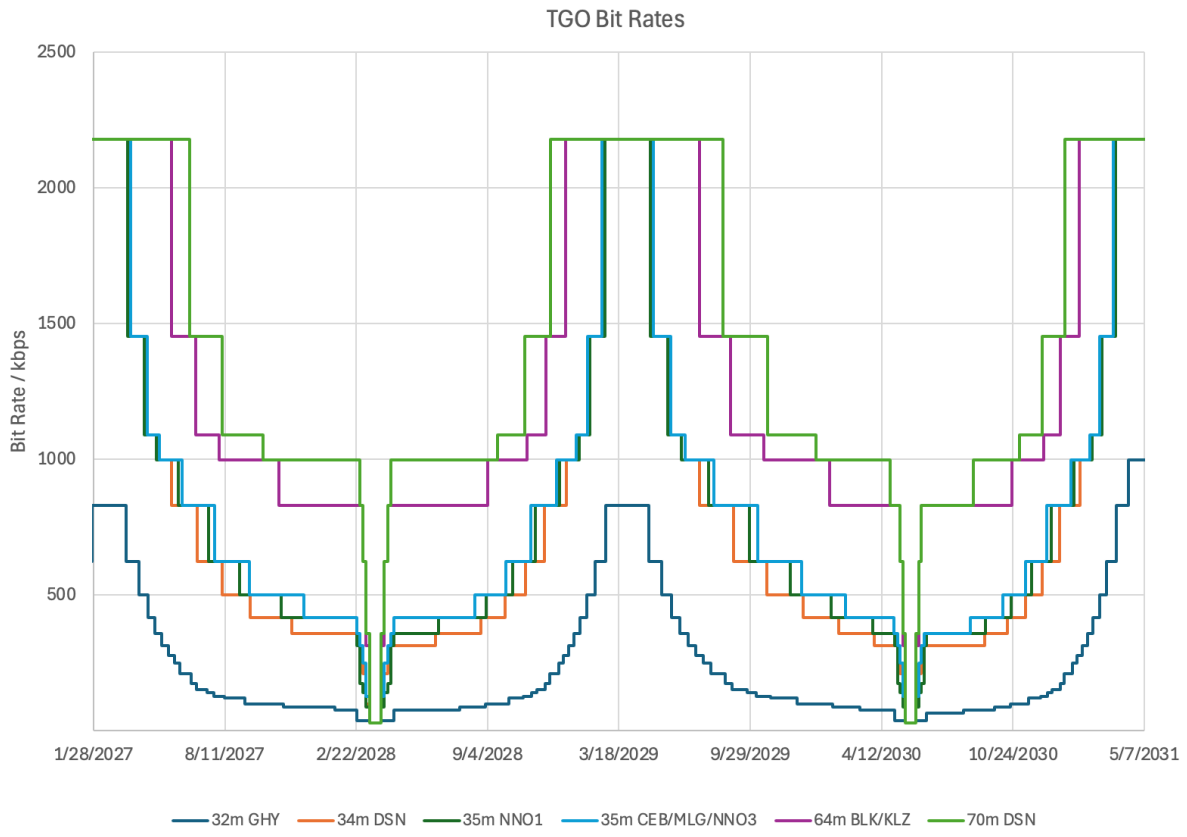

Figure 3-30: TGO X-band data rates.

3.4.6 *End-to-End Data Flows and Network Services*

Figure 3-31 shows the data flow from an ESA or NASA Lander to its GDS through TGO as a relay provider. Relay products are processed by Electra and provided to the TGO spacecraft using the CCSDS File Delivery Protocol (CFDP) format, where they are stored internally by the Payload Data Handling Unit (PDHU) to await further processing and eventual downlink. As the relay product is streamed from Electra to the PDHU, it is formatted by the PDHU into Packet Utilization Standard (PUS) Service 13 telemetry packets and aggregated into a fixed-size Large Data Unit (LDU) with a filename predetermined by the ground for each relay session. One relay session can result in multiple LDUs. When downlinked to Earth, the ground station receives TGO Telemetry Frames (which host the above mentioned PUS Service 13 packets) and forwards them on to the TGO Mission Operations Centers (MOC) via the Space Link Extension (SLE) Return Channel Frames (RCF) protocol. The TGO Mission Control System (MCS) processes the PUS Service 13 file transfer protocol TM packets, reassembles the LDUs and concatenates all LDUs belonging to a single relay session into a single relay pass product. Subsequently, the TGO MCS processes the CFDP information from the relay pass product and extracts the individual CFDP products that Electra has generated to make them available to the user. In the case of a NASA lander, Deep Space Operations Center (DSOC) polls the ESA Ground Operations System (EGOS) Data Distribution System (EDDS) out-tray frequently via secure file transfer protocol (SFTP) and retrieves any products found to be available to be

processed and passed on to the NASA lander team. In the case of ESA landers, the relay pass products and related CFDP products are transferred via the European Relay Coordination Office (ERCO) to the ExoMars Rover Operations Control Center (ROCC) and the ExoMars Surface Platform Operations Control Center (SPOCC).

Figure 3-32 shows the notional design for forward-link command relay service. In this design, ESA users interface to TGO via the TGO Relay Coordination functional element. While all NASA users interface to TGO through MaROS, MaROS does not directly deliver the uplink product to TGO, but instead it is delivered to the TGO Relay Coordination function first. Routinely forward-link file sizes up to 5 MBit can be transmitted to user spacecraft, but file sizes of 10 Mbit can be supported provided the forward-link bit rate and relay pass duration can support it.

ERCO renames the forward-link binary (FLB) file to a bit pattern file (BPF) and transfers it to the TGO MOC. Based on the forward-link trigger (FLT) file, ERCO correlates the BPF to a uniquely identified overflight and generates the corresponding TGO commanding product. The TGO MOC formats the forward-link data into PUS Service 13 telecommand packets and sends it via the Deep Space link to TGO.

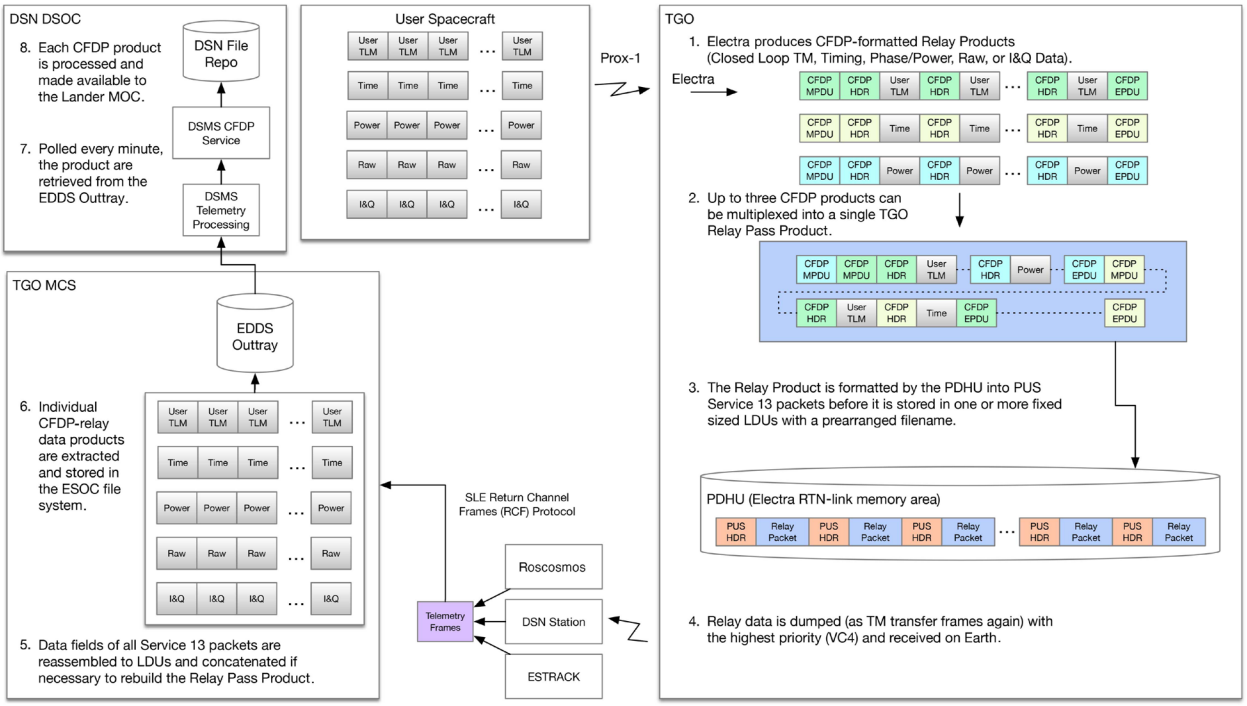

Figure 3-31: TGO return-link data flow for NASA landers.

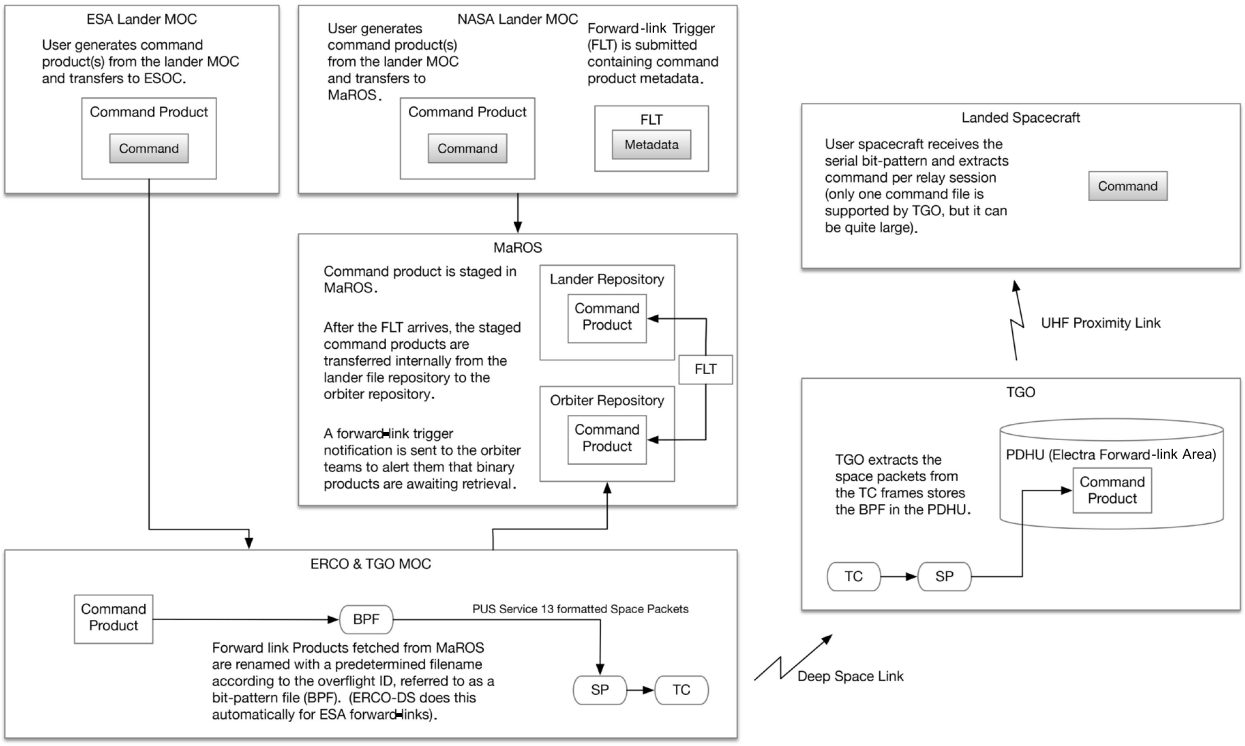

Figure 3-32: TGO forward-link command data flow.

3.4.7 *Operational Considerations, Idiosyncrasies, and Limitations*

Most TGO relay sessions are conducted with the UHF antennas pointed to nadir, however exceptions do exist. Starting in February 2021, TGO implemented “roll steering” in which relay sessions with max elevation >= 68° may feature up to a 10-deg off point from nadir towards or away from the lander and relay sessions with max elevation < 68° may feature up to 10° off-nadir towards the lander. These relays are identified by a parameter in the overflight acknowledgement file (OAF) and on MaROS as either “nadir” or “off-nadir” pointing. This is expected to impact as many as 20% of TGO relay sessions but should have a small effect on relay performance in terms of return-link data volume.

Relay sessions which are proposed after the proposal deadline but before Short Range Relay Meeting (SRR), will still be accepted by TGO provided they do not coincide or overlap with non-relay periods. These overflights might take place at an off-nadir angle of less than 20° (worst case).

TGO provides the ability to split relay services between user spacecraft, provided the two assets on the surface of Mars are in close enough proximity to each other to share a view of TGO. The coordination process for split passes is as specified in the TGO to NASA Relay User ICD. Split relay support is offered to allow both assets to share some of the view period for UHF communications in a serial fashion. The user projects coordinate how they will split the available view period between the landers. TGO requires a short cycle time of a few minutes between the two sessions.

Since 2025, TGO provides tactical change and emergency relay support capabilities. With this, lander teams can request changes to scheduled relay sessions or request completely new (unplanned) relay sessions up until the last Nominal Uplink Time (LNUT). Unplanned (emergency or contingency) relay sessions can take place at a worst case off-nadir angle of up to 20° and may not coincide or overlap with TGO non-relay periods.

3.4.8 *Reference Documents*

ExoMars Input to Mars Data Relay ICD, DRL/DRD IF-3.

Mars Relay Description for Discovery 2019 Proposals, Mars Exploration Program, Jet Propulsion Laboratory, California Institute of Technology, Pasadena, CA, 10 April 2019.

NASA Relay Orbiter to ExoMars Interface Control Document ESA-MS-ICD-ESA-00003.

TGO Electra Command and Telemetry Dictionary, Revision G, JPL D-68145, Jet Propulsion Laboratory, California Institute of Technology, Pasadena, CA, 29 September 2016.

TGO to NASA Relay User ICD, Olivier Reboud, Peter Schmitz, EXM-GS-ICD-ESC-00001, Revision 3.1, 15 July 2020.

Trace Gas Orbiter, Wikipedia, https://en.wikipedia.org/wiki/Trace_Gas_Orbiter (accessed 11 February 2026).

4 RELAY OPERATIONS

4.1 MULTIMISSION RELAY COORDINATION

Coordination of relay opportunities among service-providing relay orbiters and users of relay services is performed via a set of processes and tools jointly supporting the Mars Exploration Program (MEP) Mars Relay Network Office and the Multimission Ground Systems and Services Program (MGSS). Refer also to Figure 1-1 for the document and organization relationships in the following paragraphs.

Early in the mission lifecycle of a relay service user mission, a Mars Relay Network Service Agreement is generated to document the planned relay services that the operational set of relay orbiters will provide to the user. The Service Agreement establishes the broad parameters of support, including the timeframe in which relay services are required, the types of service (data transfer, time services, Doppler tracking, open loop recording, etc.) and the frequency of service (i.e., anticipated number of relay sessions per sol).

Traditionally, an Interface Control Document (ICD) is established between the relay service user mission and the orbiter acting as a relay service provider. The ICD defines ground data system interfaces and provides a detailed description of the specific service configurations (e.g., list of specific Proximity-1 channels, data rates, frames sizes, etc.) that are to be used. Interoperability testing and relay operations testing are specified in a Service Agreement, which is guided by the ICD. An MRN ICD is signed by representatives of both the orbiter mission and the relay user mission.[39]

During flight operations, detailed planning, scheduling and execution of operational relay services between landed spacecraft missions and the orbiters are done in accordance with the Planning Approach Document (PAD).[40] The PAD describes the ongoing operations processes and interactions among all participants in the network. It is a “living document” with periodic updates and, as such, informs the project-to-project relay operations interface agreements. Relay coordination activities across the network occur on a bi-weekly basis, whereby relay service users request and secure relay services from the orbiter projects occur on a bi-weekly basis.

Supporting all aspects of relay operations, the Mars Relay Operations Service (MaROS) provides a centralized web-based toolset to support relay planning, user mission relay service requests, orbiter mission relay service commitments, standardized interfaces for the submission of relay service user forward-link products, and integrated service monitoring and assessment. This service is provided by MGSS on behalf of the Mars Exploration Program to all current

[39] In future, the MRN will transition away from ICDs toward Interface Description Documents (IDDs) instead. An IDD documents the entire set of relay capabilities in a generic manner for all relay service users, without the need for users to sign the document. Additional documentation is generated as needed, often to detail planning cadences for long-term missions, policies for how “split passes” are to be implemented, test and training documentation, and other concerns not otherwise documented.

[40] *Mars Relay Operations Planning Approach Document,* Version 3.0, Eve Pereira, 31 March 2023, JPL D-101973. Those needing access to the current PAD should contact Roy Gladden (roy.e.gladden@jpl.nasa.gov).

participants in the Mars Relay Network, including those from the European Space Agency (ESA).

Figure 4-1 illustrates the current multimission long range and short range relay coordination processes. It also shows the kinds of data required to enable the coordination.

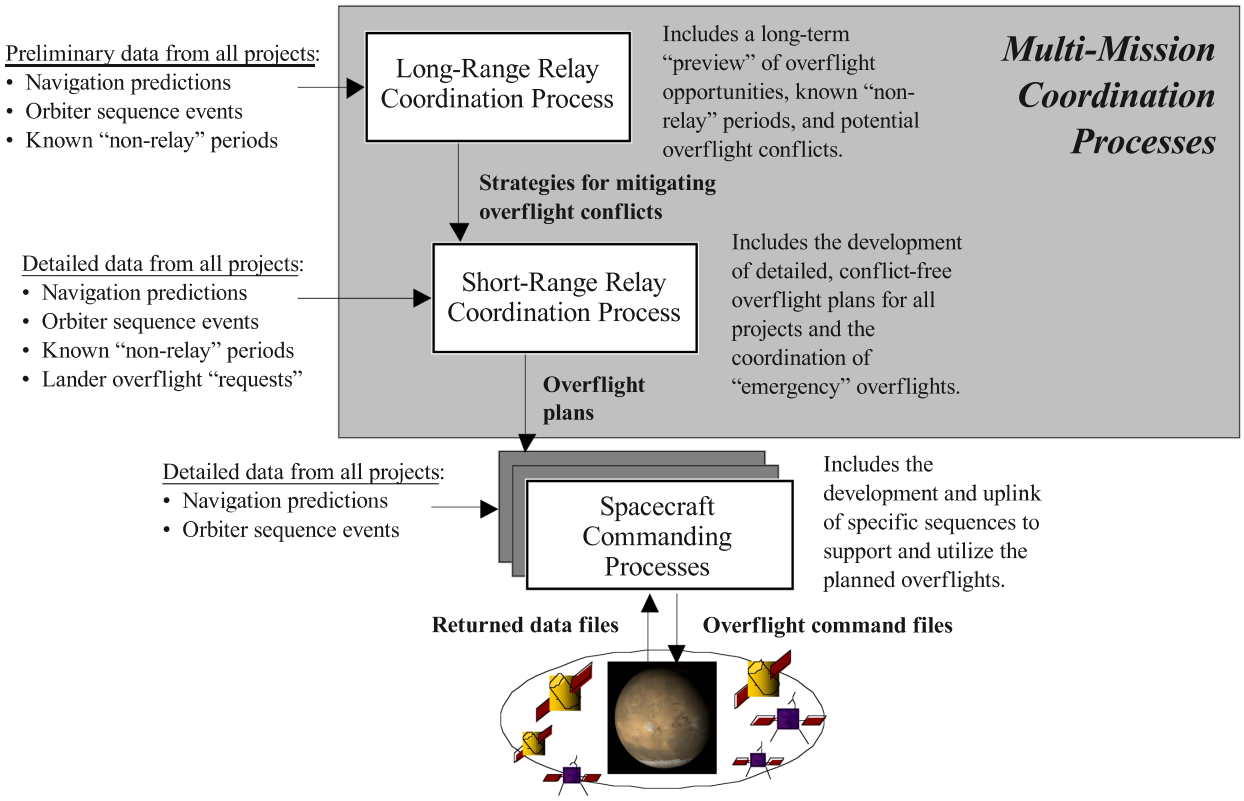

Figure 4-1: Multimission Mars relay coordination process.

4.2 LATENCY

Sending data through orbiters can incur greater latencies than sending it directly to or from Earth due to the store-and-forward nature of the link. Relative to the time that a given telemetry file onboard a landed spacecraft is ready to be sent to Earth via a relay orbiter, contributors to the end-to-end relay latency include:

- time until the next relay session,
- relay session duration,
- time until deep space tracking coverage for the relay orbiter,
- potential Mars occultation of the orbiter-to-Earth link,
- time duration to transmit the relay data on the orbiter's deep space downlink,

- one-way light time between Mars and Earth, and
- ground processing time to deliver the data to the user mission's ground data system.

When deep space tracking coverage is scheduled to overlap with relay sessions, end-to-end return-link latencies of less than 1 hour can typically be achieved.

For delivery of commands to a landed spacecraft via a relay orbiter, contributions to the end-to-end latency include:

- ground processing time to deliver the command file to the relay orbiter's ground data system,
- time to process the command file into an orbiter command product,
- potential Mars occultation of the Earth-to-orbiter link,
- time until deep space tracking coverage for the relay orbiter,
- time to radiate the command to the relay orbiter,
- one-way light time between Mars and Earth,
- time until the next relay session, and
- relay session duration.

Deterministic protocols greatly enhance the ability to predict these latencies. As part of the relay coordination process, predictions of forward- and return-link latency are calculated and posted within the MaROS system.

4.3 EDL CONSIDERATIONS

For critical events, such as a mission's Entry, Descent, and Landing (EDL), relay orbiters can typically adjust their orbit phasing (that is, adjust the true anomaly of the orbit) to provide favorable viewing geometry for recording the landing spacecraft's telemetry. Assuming that the desired orbit phasing is known several months in advance, the phasing can typically be adjusted at low propellant cost.

By contrast, changes in the orientation of the orbit plane (e.g., changing the local time of the ascending node) typically have much greater propellant costs. In general, relay service users should not assume that orbit plane adjustments can be accommodated (refer to Table 2-3 for current MRN orbital parameters). Any such orbit change would need to be carefully negotiated considering the orbiter propellant budget, the magnitude of the required plane change, and the duration over which that change can be implemented.

The antenna placement on an arriving/descending vehicle and that vehicle's attitude relative to the orbiter are critical to maintain communication during EDL. It may be possible to provide enhanced orbiter pointing for special one-time events such as EDL to improve critical event telemetry support.

Plasma outages may occur on UHF relay links during the hypersonic phase of entry, depending on the spacecraft's approach angle and velocity.

4.4 COMPATIBILITY TESTING OF RELAY SERVICE USER RADIOS

Radio-to-radio compatibility testing and end-to-end information system testing between the relay service user mission testbed and the orbiter mission testbed are essential to ensure successful relay operations. This testing is typically done before the launch of a new user mission. While each orbiter mission maintains the ground test systems necessary to support compatibility testing, the user mission is responsible for the costs of such tests.

Typically, this testing provides a means to verify the exact radio modes (data rates, encoding modes, inversion settings, etc.) to be used during EDL and on-surface operations. Connectivity between the two radios is demonstrated, as is the end-to-end exchange of data in both the forward- and return-link direction through the mission operations systems (which includes the ground systems) of both the relay service user mission and the relay service provider mission. This testing is considered critical to ensure that the radios will function together upon arrival at Mars.

4.5 COMPUTATION OF RELAY VIEW PERIODS

The Metric Predicts Executive (MPX) is a subsystem of MaROS that automatically calculates relay view periods between all compatible orbiters and landers. When a new orbiter ephemeris prediction file is delivered to the DSN's Service Preparation Subsystem (SPS), MPX automatically ingests this file to calculate view period predicts. Once ready, MaROS queries view periods from MPX and updates its corresponding overflight data to reflect the latest geometry from the orbiters.

5 RELAY TELECOM DESIGN ISSUES AND CHALLENGES

5.1 EMI IMPACTS

Electromagnetic interference (EMI) can degrade the performance of a relay session due to:

- False carrier lock, leading to reduced data volume or the complete loss of a relay session
- Demodulation losses
- Erratic changes in adaptive data rates, including data rate cycling over one or more steps, resulting in reduced data volume

Any operational strategies that involve changing nominal operations of an orbiter or its science instruments to achieve relay goals or mitigate EMI are risky and subject to modification or adjudication due to the ongoing interests of orbiter spacecraft managers or scientists. The user mission must be aware of this when making or accepting operational commitments with the orbiter mission. See also Section 5.7. Examples of such commitments include:

- Turning off instruments, idling instruments, stopping scan platform motions with the goal of lowering EMI and improving relay link performance, or roll steering for a relay session.
- Adhering to service provision levels specified in service agreements.

5.2 MARS ORBITER LINK GEOMETRY

The relay capabilities and constraints of the Mars Relay orbiters depends significantly on the type of orbit.

5.2.1 *Low, Near-circular Mars Orbits*

Odyssey (ODY) and the Mars Reconnaissance Orbiter (MRO) are in orbits characterized as low altitude, polar, Sun-synchronous, and near circular. For these orbiters, most relay sessions involve low-elevation angle geometry, but with a minimum of 10 deg commonly assumed by the user missions.

For these orbiters, coverage at or near the equator becomes challenging. MRO and ODY have four overflights per sol at the equator. Two of the overflights are often far shorter than the other two, but this phenomenon “walks” throughout the repeat cycle.

An overflight’s duration may be only 7 to 8 minutes if it includes the shorter of the two AM passes and of the two PM passes. These short overflights are not typically utilized. A pass duration of 10 to 11 minutes is typical for the utilized overflights.

The minimum elevation angle can refer either to the minimum angle that a lander project imposes on itself for telecom margin or to the minimum highest elevation angle a project will entertain for UHF candidates. Minimum elevation angle for near-circular orbits has a strong impact on slant range and thus a strong impact on the useful starting data rate for ADR operations or the single data rate used.

Low elevation angles also get into regions of a near-nadir pointed antenna pattern that are more uncertain and variable. Lower elevation angles also tend to involve more multipath effects on the signal. The result of both these factors is more uncertainty in instantaneous link capacity and data return volume. Roll steering by the orbiter is more valuable for lower elevation angle passes.

5.2.2 *Non-Sun Synchronous Mars Orbits*

TGO and MEX (and formerly MAVEN) have orbits that, due to their inclination, ellipticity, or both, do not have regular ascending and descending nodes (i.e., regular AM and PM pass times). This makes such orbits less useful for tactical planning, where a regular cadence of relay transmission is preferred. On the other hand, TGO's higher near-circular orbital altitude (compared to ODY or MRO) affords a longer average pass duration of 17 minutes, compared to MRO's average pass duration of 10 minutes. This higher orbit results in greater relay throughput than MRO, even when accounting for differences in equipment performance (in other words, TGO in TGO's orbit has better data throughput than TGO in MRO's orbit).

5.3 EDL

The following considerations come into play when a landed mission uses one or more orbiters for communication during the Entry, Descent, and Landing (EDL) phase of its mission:

- Multi-orbiter coverage strategies
- Plasma outages
- Open loop recorded data volume concerns and latency of returning data to Earth, and processing data into engineering information
- Open loop recording vs. Proximity-1
- Choosing data rate and channel coding for EDL links

5.4 RELAY THROUGHPUT

Relay data throughputs (i.e., data volume as a function of time) do not generally match the advertised data rates. This is true of both the return-link and the forward-link, as well as in some rare instances where a throttling back of return-link data and/or anomalous "hanging" of the session can occur. These are described as follows.

5.4.1 *Return-Link and Forward-Link Efficiency*

Generally, Electra throughput efficiencies tend to lessen as data rate increases.[41] This is because the modem processor and software are taxed more heavily as data rate increases. Typical throughput efficiencies for the current Electra orbiter fleet are shown in Table 5-1.[42] These efficiencies apply to both adaptive data rates and fixed data rates. For adaptive data rate passes there is an additional "tax" in the form of a pause in throughput during rate changes. A typical TGO ADR session of 17 minutes will have upwards of 10 - 20 command changes (mostly

[41] For non-software defined radios, such the C/TT-505 or MELACOM, which operate at lower fixed data rates than Electra, throughput efficiency is 100%.

[42] Future instantiations of JPL's software defined radios are expected to have higher throughput efficiencies.

at lower rates), which is approximately 1-2 minutes when return rates are switching and data is not flowing.

Table 5-1: Electra data transfer efficiencies and ADR switch times.

Coded Data Rate (kbps)	Return Effic. (%)	Forward Effic. (%)	ADR Switch Time (s)
8	95.00	83.47	5.0
16	95.00	83.47	5.0
32	97.30	83.47	5.0
64	98.90	82.90	5.0
128	99.40	81.75	4.5
256	97.13	79.46	4.0
512	98.80	-	3.5
1024	94.50	-	3.0
2048	81.80	-	2.5

At a nominal coded data rate of 32 kbps, the effective forward-link throughput is 26.7 kbps. Assuming control frames at a maximum rate of ~1.7 kbps, the bandwidth for forward-link transfer is on the order of 25 kbps or more. In practice, the control frame rate varies as a function of return-link data rate, with lower rates requiring lower control frame rates. In recent flight forward-link file transfers to Mars 2020, a series of 486,664-byte files were transmitted by TGO at average data rates ranging from 15.4 kbps to 26.5 kbps. As a notional starting point for forward-link data transfers, the relay user may assume throughput efficiencies as described but should coordinate with the relay provider to verify achievable throughputs and transfer times for their operating scenario.

5.4.2 *Anomalous Throughput*

Electra will very occasionally experience a substantial reduction in data throughput, and in some instances, the link will stall with no subsequent transfer of return-link data. This anomaly has been observed at least once on each of the Electra orbiters in the following passes:

- TGO_M20_2022_245_02 (ISA 212986)
- MVN_M20_2023_345_02 (ISA 217537)
- MRO_M20_2025_328_02 (included as part or above ISAs)

The anomaly is characterized by little or no data flowing for a portion of an ADR pass, despite adequate signal-to-noise ratio (SNR). During this period of stalled throughput, data frames are being received by the orbiter but are rejected due to bad CRC or being out of sequence. Control frames are received without issue, and the return-link data rate will vary depending on SNR as though the link were function normally. A change in data rate, or a link drop and rehail, will *sometimes* trigger an escape from this stalled state, but not always.

Passes where the data rate stalls to zero are exceptionally rare, estimated to be less than 1 pass in every 2000. Analysis is ongoing to determine the frequency of data rate stalls that are significantly lower than the nominal rate (but are non-zero) across all the Electra orbiters but is currently estimated to be less than 1 in every 200 passes, based on MAVEN data. Passes that have a transient (but non-zero) reduction in throughput are generally difficult to

detect, because the net change in data volume may not be appreciably different than the predict.

As of time of writing, these anomalies have been dispositioned with root cause "unknown" and corrective action as "use as is", due to the infrequency of the anomaly.

5.5 DATA VOLUME PREDICTS

A landed mission needs to consider the following in planning real-time and playback data volume:

- Antenna pattern uncertainties and multipath, and their impact on predicted data volume
- Availability of ADR in the orbiter's Electra UHF Transceiver (EUT)
- Minimum acceptable elevation angle and required maximum elevation angle
- Selection of the landed mission's relay sessions from a larger list of available passes
- Throughput time duration expected based on use of a forward-link vs. no forward-link and the maximum data rate considerations for throughput
- Impact of radiometric recording and time stamp collection on relay data throughput
- Link margin:
  - Margin policy (such as 3 dB) and tolerance assumptions (such as 2-sigma)
  - Impact of EMI and frequency-dependent RF front end losses
  - Bit error rate (BER) or frame error rate (FER)

5.6 PROXIMITY-1 SETTINGS

Among the settings the landed mission must take into consideration through analysis and test are the following.

- Impact and importance of acknowledgement delay
- Go-back-N and frame size
- Channel frequency
- Response to hail time window
- Impact of radiometric and time stamp collection on Proximity-1 settings

5.7 SPACECRAFT AND SUBSYSTEM LIFETIME ISSUES

In their coordination with potential and existing landed missions, the orbiter projects consider their own requirements and constraints, such as the following:

- Use of remaining propellant to change orbit to support landed mission EDL events
- Spacecraft attitude change limits due to solar power or thermal heating constraints. These result in roll steer limits or EDL support orientation limits.

- Turn on/off of or change operating modes of science instruments to improve landed mission receive link performance
- Effect of transceiver on/off cycling for landed mission relay sessions on the lifetime of radio hardware; radiation and thermal cycles

5.8 MARS NETWORK USE PLANNING

Each orbiter in the Mars Relay Network (MRN) is unique in capability and operating constraints. Thus, taken together, orbiters make a heterogeneous set. The landed missions take this into consideration. As described in Section 4.1, the Planning Approach Document (PAD) describes the ongoing operations processes and interactions among all participants in the network. Through its periodic updates the PAD informs the project-to-project relay operations interface agreements. Orbiter and landed missions contribute to the MRN use planning through considerations of the following.

- Heterogeneous function and performance of relay assets
- Heterogeneous mission priorities and lifetime issues
- Relay support services competition between landed missions
- Relay session selection from a larger list of available passes
- Shared usage issues caused by small ODY relay buffer
- Future possible extension to multiple access support, such as Proximity-1 extension to frequency division multiple access (FDMA). Presently, having all Proximity-1 sessions hailing on the same channel prevents multiple simultaneous sessions during overlapping view periods with different assets.
- Future preparation for use of new relay functions, including in the onboard command sequences and verification activities in project testbeds.

6 LESSONS LEARNED

Relay operations in support of the Mars Exploration rovers, the Phoenix lander, the ExoMars/EDL Demonstrator Module (EDM), the Mars Science Laboratory (MSL) rover, InSight (NSY) lander, and the Perseverance (M2020) rover have provided several lessons learned, applicable to future relay support scenarios:[43]

- Early transceiver-level UHF compatibility testing should be performed to validate interoperability between the transceivers of the relay service user and the relay service provider.
- Full end-to-end data flow tests should be performed early as well, to validate the entire data flow path, including flight and ground elements of both the relay service user project and the relay service provider project.
- Operational readiness tests (ORTs) should be scheduled and performed to fully exercise the user and orbiter relay operations teams prior to entry, descent, and landing (EDL) and surface operations.
- In-flight testing of expected modes of operation, when possible, are valuable to ensure readiness of the relay service provider mission.
- Timely coordination and assured response to requests for data flow information need to be set up and tested in advance. In real time, this includes “telecom coordination” voice nets for participation of relay orbiter operators and user mission operators and multimission radio science. In non-real-time, setting up always-staffed points-of-contact for response to data flow issues raised by a user mission as well as data flow problems reported by an orbiter mission or the Deep Space Network (DSN).
- Limiting the number of distinct modes that a relay service user requires can significantly reduce relay test costs. To that end, users should establish the minimum required set of Proximity-1 configurations (e.g., data rates, frame sizes, automatic repeat request (ARQ) parameters, frequency channels) to support their relay needs.
- Interoperability testing should be as flight-like as possible. For instance, transceiver behavior should be characterized under both favorable and adverse link characteristics, and system level testing should simulate representative processing loads on flight system processors and data buses.
- UHF link performance can be adversely affected by EMI from other spacecraft elements, including science instruments and flight avionics. Early attention to EMI considerations, including subsystem level design and test, system level grounding, and system level testing, are critical to meeting EMI requirements. In some cases, specific flight rules may be required to constrain the use of certain payloads during relay operations to eliminate sources of EMI.

[43] R. Gladden, et al, *Lessons Learned from the Mars Relay Network: Considerations for Future Relay Networks,* 2024 AIAA/IEEE Aerospace Conference, Big Sky, MT, March 2024.

Appendix A Link Budget Calculations

Table A-1: Link budget calculation.

SPACECRAFT		TGO - M20		Calculation / Notes
Link Type		Forward	Return	
Modulation		Residual	Suppressed	
Modulation Index	radian	1.047	1.571	
Data Rate (Rb)	kbps	32	2048	
Frequency (f)	MHz	437.1	401.6	
GEOMETRY DATA				
M20 - TGO Elevation	deg	30.0	30.0	These data are for informational purposes only. Antenna patterns would need to be available to translate geometry into off-points and clocks.
M20 - TGO Azimuth	deg	300.0	300.0	
TGO Boresight Offpoint	deg	45.0	45.0	
TGO Boresight Clock	deg	275.0	275.0	
M20 Boresight Offpoint	deg	60.0	60.0	
M20 Boresight Clock	deg	105.0	105.0	
TRANSMITTER PARAMETERS				
1. Transmitter Power	dBm	37.6	39.5	
2. Circuit Loss	dB	-0.9	-1.7	
3. Antenna Gain	dBic	2.0	3.1	
4. EIRP	dBic	38.7	40.9	1 + 2 + 3
PATH PARAMETERS				
5. Range	km	700.0	700.0	
6. Space Loss	dB	-142.2	-141.4	-20*log10(4*PI*Range/Wavelength)
7. Polarization Loss	dB	-0.2	-0.2	Will depend on antennas and aspect angles
8. Atmospheric and Multipath Loss	dB	0.0	0.0	
9. Sky Temperature (Tsky)	K	190.0	190.0	Typical GTP value
RECEIVE PARAMETERS				
10. Antenna Gain	dBi	1.8	3.0	
11. Circuit Loss	dB	-3.3	-0.6	
12. Total Received Power	dBm	-105.1	-98.3	4 + 6 + 7 + 8 + 9 + 10
13. Reference Temperature (Tref)	K	293.0	293.0	20 C or room temp
14. Noise Figure (NF)	dB	1.4	3.1	CTT/505 Handbook RTP/GTP
15. System Noise Temperature	K	354.2	509.9	Tsky*10^(Loss/10)+Tref*(10^(NF/10)-10^(Loss/10))
16. Noise Spectral Density	dBm/Hz	-173.1	-171.5	10*log10(Tsys*k) k = Boltzman's constant = 1.23e-23
17. Total Power to Noise Density	dB-Hz	68.0	73.2	12 - 16
TELEMETRY PERFORMANCE				
18. Residual Carrier Loss	dB	-1.25	0.00	20*log10(sin(MOD_IDX))
19. Total Data Power	dB	-106.4	-98.3	12 + 18
20. Data Power to Noise Density	dB-Hz	66.8	73.2	17 + 18
21. Data Rate	dB/Hz	45.1	63.1	10*log10(Rb)
22. System Losses(SysLoss)	dB	-0.6	-0.9	EMI, demod, AGC

23. Eb/No	dB	21.1	9.2	20 - 21 + 22
DATA RATE AND LINK MARGIN				
24. Eb/No Threshold (SSNRt)	dB	5.7	2.7	Conv / LDPC
25. Margin Policy	dB	3.0	3.0	Standard fixed rate margin policy
26. Eb/No Margin	dB	15.4	6.5	23 - 24
27. Theoretical Max Rate (no	kbps	512	8192	2^FLOOR(LOG2(10^((Pd/No - SSNRt +
28. Available Max Rate	kbps	256	2048	

Appendix B Adaptive Data Rate Settings

Table B-1: TGO ADR settings with preferred valued in boldface.

Parameter	Description	Value/Format	Parameter Name
ADR Enable Flag	Specifies whether ADR should be used during the relay session.	"ADR_ON", "ADR_OFF"	ADR_Enable_Flag
ADR Maximum Return-Link Data Rate	Highest return-link data rate (kbps) when ADR is enabled.	32, 64, 128, 256, 512, 1024, **2048**	ADR_Max_Rtn_Rate
ADR Minimum Return-Link Data Rate	Lowest return-link data rate (kbps) when ADR is enabled.	8, 16, 32, 64, 128, 256 **32**	ADR_Min_Rtn_Rate
ADR Signal-to-Noise Ratio (SNR) Sampling Period	Sampling period (seconds) for estimating SNR when ADR is enabled.	0 to 4294967295 **1**	ADR_SNR_Sampling_Period
ADR Signal-to-Noise Ratio Step	Step (dB) that determines the number of rate changes that will be commanded when the High threshold is exceeded.	1 to 31.96875 **10**	ADR_SNR_Ratio_Step
ADR Signal-to-Noise High Threshold	SNR threshold (dB) above which ADR will command a rate change of at least one data rate above the current one.	0 to 31.96875 **10** (M20), **7** (MSL)	ADR_SNR_High_Thresh
ADR Signal-to-Noise Low Threshold	SNR threshold (dB) below which ADR will command a rate change of one data rate below the current one.	0 to 31.96875 **6** (M20), **3** (MSL)	ADR_SNR_Low_Thresh
ADR Signal-to-Noise Deep Threshold	SNR threshold (dB) below which ADR will command a rate change of two data rates below the current one.	0 to 31.96875 **3** (M20)**, 0** (MSL)	ADR_SNR_Deep_Thresh
ADR High Persistence Threshold	Number of consecutive high SNR samples to be counted before an ADR rate increase is commanded.	0 to 4294967295 **3**	ADR_High_Pers_Thresh
ADR Low Persistence Threshold	Number of consecutive low SNR samples to be counted before an ADR rate decrease by 1 rate is command.	0 to 4294967295 **2**	ADR_Low_Pers_Thresh
ADR Deep Persistence Threshold	Number of consecutive deep SNR samples to be counted before an ADR rate decrease by 2 rates is commanded.	0 to 4294967295 **1**	ADR_Deep_Pers_Thresh
ADR High Wait Duration	Duration (seconds) after a High Persistence Threshold transition during which further rate change are prevented.	0 to 4294967295 **5**	ADR_High_Wait_Delay
ADR Low Wait Duration	Duration (seconds) after a Low Persistence Threshold transition during which further rate changes are prevented.	0 to 4294967295 **5**	ADR_Low_Wait_Delay
ADR Deep Wait Duration	Duration (seconds) after a Deep Persistence Threshold transition during which further rate changes are prevented.	0 to 4294967295 **5**	ADR_Deep_Wait_Delay

Table B-2: MRO ADR settings with preferred valued in boldface.

Parameter	Description	Value/Format	Parameter Name
ADR Enable Flag	Specifies whether ADR should be used during the relay session.	"ADR_ON", "ADR_OFF"	ADR_Enable_Flag
ADR Maximum Return-Link Data Rate	Highest return-link data rate (kbps) when ADR is enabled.	32, 64, 128, 256, 512, 1024, **2048**	ADR_Max_Rtn_Rate
ADR Minimum Return-Link Data Rate	Lowest return-link data rate (kbps) when ADR is enabled.	8, 16, 32, 64, 128, 256 **32**	ADR_Min_Rtn_Rate
ADR Signal-to-Noise Ratio (SNR) Sampling Period	Sampling period (seconds) for estimating SNR when ADR is enabled.	0 to 4294967295 **1**	ADR_SNR_Sampling_Period
ADR Signal-to-Noise Ratio Step	Step (dB) that determines the number of rate changes that will be commanded when the High threshold is exceeded.	1 to 31.96875 **10**	ADR_SNR_Ratio_Step
ADR Signal-to-Noise High Threshold	SNR threshold (dB) above which ADR will command a rate change of at least one data rate above the current one.	0 to 31.96875 **7**	ADR_SNR_High_Thresh
ADR Signal-to-Noise Low Threshold	SNR threshold (dB) below which ADR will command a rate change of one data rate below the current one.	0 to 31.96875 **3**	ADR_SNR_Low_Thresh
ADR Signal-to-Noise Deep Threshold	SNR threshold (dB) below which ADR will command a rate change of two data rates below the current one.	0 to 31.96875 **0**	ADR_SNR_Deep_Thresh
ADR High Persistence Threshold	Number of consecutive high SNR samples to be counted before an ADR rate increase is commanded.	0 to 4294967295 **3**	ADR_High_Pers_Thresh
ADR Low Persistence Threshold	Number of consecutive low SNR samples to be counted before an ADR rate decrease by 1 rate is command.	0 to 4294967295 **3**	ADR_Low_Pers_Thresh
ADR Deep Persistence Threshold	Number of consecutive deep SNR samples to be counted before an ADR rate decrease by 2 rates is commanded.	0 to 4294967295 **1**	ADR_Deep_Pers_Thresh
ADR High Wait Duration	Duration (seconds) after a High Persistence Threshold transition during which further rate change are prevented.	0 to 4294967295 **5**	ADR_High_Wait_Delay
ADR Low Wait Duration	Duration (seconds) after a Low Persistence Threshold transition during which further rate changes are prevented.	0 to 4294967295 **5**	ADR_Low_Wait_Delay
ADR Deep Wait Duration	Duration (seconds) after a Deep Persistence Threshold transition during which further rate changes are prevented.	0 to 4294967295 **5**	ADR_Deep_Wait_Delay

Appendix C Acronyms and Abbreviations

1D	One-dimensional
2D	Two-dimensional
ACE	Call sign of the real-time project representative on voice net
A/D	analog-to-digital
ADR	adaptive data rate
AGC	automatic gain control
AIAA	American Institute of Aeronautics and Astronautics
AMMOS	Advanced Multimission Operations System
AOS	Advanced Orbiting Systems – CCSDS Standards
API	Application Programming Interface
APID	Application Packet ID
APP	Articulated payload platform
ARQ	Automatic Repeat Request
ASIST	Advanced System for Integration and Spacecraft Test
ASM	Attached Synchronization Marker
ASP	Automated Sequence Processor
Assy	assembly
Aux-Osc	Auxiliary oscillator (in the SDST)
BER	Bit Error Rate
BP1, BP2	Bandpass filters 1 and 2
BPF	Bandpass Filter
BPF	Bit-pattern file (TGO ESOC)
BPM	Baseband Processor Module (of the EUT)
BPSK	Binary phase-shift keying
CA	California
C&C	Command and control
C&DH	Command and Data Handling
CC	Communications Change (Proximity-1 activity)
CC	Convolutional coding
CCSDS	Consultative Committee for Space Data Systems
CDE	Author’s initials (typical, in a document ID)
CDU	Command Detector Unit
CDR	Critical Design Review
CE	Cincinnati Electronics
CFDP	CCSDS File Delivery Protocol

CLTU	Command Link Transmission Unit
CMCEC	CMC Electronics Cincinnati (formerly known as Canadian Marconi Company until 2001)
Cmd	command
CO	Colorado
CRC	Cyclic Redundancy Code
CRISM	Compact Reconnaissance Imaging Spectrometer for Mars
CW	Continuous Wave
dBic	decibels relative to an isotopic circularly polarized radiator
DCT	Design Control Table
DDS	Data Distribution Server
DeepT	Deep Threshold
DESCANSO	Deep Space Communications & Navigation Systems Center of Excellence
DMD	Data Monitor and Display
DOM	Distributed Object Manager
DOR	Direct Operation Request
DOY	Day of Year
DPDU	Data PDU
DPLF	DOR Parameter List File
DRAM	Dynamic random access memory
DRD	Data Requirements Description
DRL	Data Requirements List
DSMS	Deep Space Mission System
DSN	Deep Space Network
DSOC	Deep Space Operations Center
DTCI	Data, Telemetry, and Command Interface
DTE	Direct-to-Earth
DTTL	digital data-transition tracking loop
DWN_PCKT	Down Packet (abbreviations in the ODY DWN_PCKT_BUFFER FSW object)
DX1	Diplexer 1
EDAC	Error Detection and Correction
EDDS	ESA Ground Operations System (EGOS) Data Distribution System
EDL	Entry, Descent, and Landing
EDM	EDL Demonstrator Module
EEIS	end-to-end information system
Electra	Name of a UHF radio (not an acronym) 4b reference to an IOM
ELGTL	early/late gate tracking loop

ELT	Electra-Lite Transceiver
EM	engineering model
EMI	electro-magnetic interference
EMTGO	ExoMars/Trace Gas Orbiter
EPC	Electronic Power Converter
EPDU	End-of-file PDU
ERCO	ESA Relay Coordination Office
ERCO-DS	European Relay Coordination Office – Data System
ESA	European Space Agency
ESOC	European Space Operations Centre
ESTRACK	European Space Tracking Network
ET	Ephemeris Time
EUT	Electra UHF Transceiver
F	Full-duplex (in missions' RF Characteristics tables)
FDMA	frequency division multiple access
FECW	Frame Error Control Word
FEC	forward error correction
FER	Frame Error Rate
FIFO	First In First Out
FLB	forward-link binary
FLT	forward-link trigger
FM	flight model
FRF	File Release Form
FSK	Frequency Shift Keying
FTP	file transfer protocol
FWD	Forward
G2	Generator vector in a convolutional code
GDE	Gimbal Drive Electronics
GDS	Ground Data System
GN&C	Guidance, Navigation and Control
GRS	Gamma Ray Spectrometer
GTP	Generalized Telecom Predictor
HDO	Half-duplex overlay
HDR	Header
HGA	High Gain Antenna
HighT	High Threshold
HiRISE	High Resolution Imaging Science

HK	Housekeeper
HKTM	Housekeeping Telemetry
HTR	heater
HSD	High Speed Data
I	in-phase component of a waveform
I&Q	In-phase and Quadrature components in a waveform
IAU	International Astronomical Union
ICD	Interface Control Document
IDD	Interface Description Document
IEEE	Institute of Electrical and Electronics Engineers
IF1–IF6	Interface designators used for harness through the gimbal assembly
IOM	Interoffice Memorandum
IPv4, IPv6	Internet Protocol version 4, Internet Protocol version 6
ISDN	Integrated Services Digital Network
J1–J4	Port designators of each individual component
J2000	a reference epoch per the IAU
J3	a Bessel function defining the oblateness of Mars
JMEP	Joint Mars Exploration Program
JPL	Jet Propulsion Laboratory
Ka-band	Frequency band (31-33 GHz for Mars orbiter downlink)
kbps	kilobit(s) per second
ksps	kilosymbols per second
LCP, LHCP	Left-hand circular polarization
LDPC	low-density parity-check
LDU	Large data unit
LGA	Low Gain Antenna
LMSS	Lockheed Martin Space System
LMST	Local Mean Solar Time
LowT	Low Threshold
LRS	Limited Release System
LVDS	Low Voltage Differential Signaling
MARCI	Mars Color Imager
MaROS	Mars Relay Operations Service
MAVEN	Mars Atmosphere and Volatile Evolution (also MVN)
MCD	Maximum Likelihood Convolutional Decoder (MCD2 or MCD3)
MCR	Mission Concept Review
MCS	Mars Climate Sounder (instrument on MRO)

MCS	Mission Control System (ESA)
MEJI	Mars Exploration Joint Initiative
MELACOM	Mars Express Lander Communications
MEP	Mars Exploration Program
MER	Mars Exploration Rover
MEX	Mars Express (orbiter)
MGA	Medium Gain Antenna
MGS	Mars Global Surveyor
MGSS	Multimission Ground Systems and Services Program Office
MHz	Megahertz
MME	Mars Mean Equator of date
MOA	Memorandum of Agreement
MOC	Mission Operations Centers
MOI	Mars Orbit Insertion
MP	Modem Processor
MPDU	Meta-data PDU
MRN	Mars Relay Network
MRNO	Mars Relay Network Office
MRO	Mars Reconnaissance Orbiter
MROSP	MRO Science Protocol
MSL	Mars Science Laboratory
MSP	Mars Surveyor Program
MSPA	multiple spacecraft per aperture
MT	Montana
N/A	Not Applicable
NASA	National Aeronautics and Space Administration
Nav	Navigation
NF1, NF2	Notch Filters 1 and 2
NGIMS	Neutral Gas Ion Mass Spectrometer
NIFL	Non-interactive File Load
NMD	No More Data (Electra configuration directive)
NO-OP	No-Operation (command)
NPR	NASA Procedural Requirements
NRZ	Non Return to Zero
NRZ-L	Non Return to Zero Level
NRZ-L/PM	data modulation is NRZ-L and carrier modulation is PM
OAF	Overflight Acknowledgement File

OCXO	Oven Controlled Crystal Oscillator
ODY	Odyssey (Mars orbiter)
OIA	Operations Interface Agreement
ORT	Operational Readiness Test
OSI	Open System Interconnect
OTB	Orbital Test Bed
PAD	Planning Approach Document
PC	Payload controller
PCDU	Power Conditioning and Distribution Unit
PCM	Pulse-code modulation
PD	Project Document
PDDU	Power Distribution and Drive Unit
PDHU	Payload Data Handling Unit (TGO)
PDR	Preliminary Design Review
PDU	Protocol Data Unit
PFP	Particle and Fields Package
PFR	Problem Failure Report
PICS	Proximity-1 Implementation Compliance Sheet
PLCW	Proximity Link Control Word
PLL	Phase locked loop
PLTU	Proximity Link Transfer Unit
PM	Phase modulation
PRT	Platinum resistance thermometer
PSK	Phase Shift Keying
PSO	Primary science orbit (MRO)
PSP	Primary Science Phase
PUS	Packet Utilization Standard
Q	quadrature component of a waveform
QoS	Quality of Service
QPSK	Quadrative Phase Shift Keying
RCF	Return Channel Frames protocol (of SLE)
RCP, RHCP	Right-hand circular polarization
RF	Radio frequency
RFDU	Radio Frequency Distribution Unit
RMS	root mean square
ROTO	Requested Off-Nadir Targeted Observation
R-S, RS	Reed-Solomon

RTN	Return
Rx	Receive; return-link
S	Simplex (in missions' RF Characteristics tables)
SA1–SA4	Attenuators 1 through 4
SAP	service access point
S/C	Spacecraft
SCET	Spacecraft event time
SCID	Spacecraft ID
SCLK	Spacecraft clock
SCMF	Spacecraft Command Message File
SDST	Small Deep Space Transponder
SDU	Service Data Unit
SE	Surface Element
SFDU	Standard Formatted Data Unit
SFTP	Secure File Transfer Protocol
SHARAD	Shallow Subsurface Radar
SIR	System Integration Review
SIS	System Interface Specification
SLE	Space Link Extension
SMU	Spacecraft Management Unit
SNR	Signal-to-Noise Ratio
Src Pkt	Source packet
SP	Space packet
SPDT	Single Pole Double Throw
SRO	Science Relay Orbit (for MAVEN as of late 2020)
SSNR	Symbol signal to noise ratio
SSO	Sufficiently Stable Oscillator
SSP	Space Segment Payload
SSPA	Solid-State Power Amplifier
SSR	Solid-State Recorder
SW	software or switch (depending on context)
TAME	Three-Axis Motor Electronics
TBR	To Be Revised
TC	Telecommand – CCSDS Standards
TCCO	Temperature-controlled crystal oscillator
TCD	Trajectory Characteristics Document
TCP/IP	Transmission Control Protocol/Internet Protocol

TCXO	Temperature controlled crystal oscillator
TDS	Telemetry Data Distribution
TF HDR	Transfer frame header
TGO	Trace Gas Orbiter
THEMIS	Thermal emission imaging system (Mars Odyssey)
TIM	Technical Interface Meeting
TIS	Telemetry Input Subsystem
Tlm, TLM	telemetry
TM	Telemetry – CCSDS Standards
TWTA	Traveling Wave Tube Amplifier
Tx	Transmit; forward-link
UDD	user-defined data
UHF	Ultra high frequency (radio frequency band, 390-450 MHz for Mars orbiters)
ULDL	Uplink/Downlink
USM	Universal switch module
USO	Ultra-stable oscillator
UTC	Universal Time Coordinated
V&V	Verification & Validation
VC	Virtual Channel
VME	VersaModular Eurocard
WC	Coaxial cables
WG	waveguide
WIU	Waveguide Interface Unit
WW	waveguides (used in block diagram)
X-band	radio frequency band (7–9 GHz for Mars orbiters)
XML	Extensible Markup Language