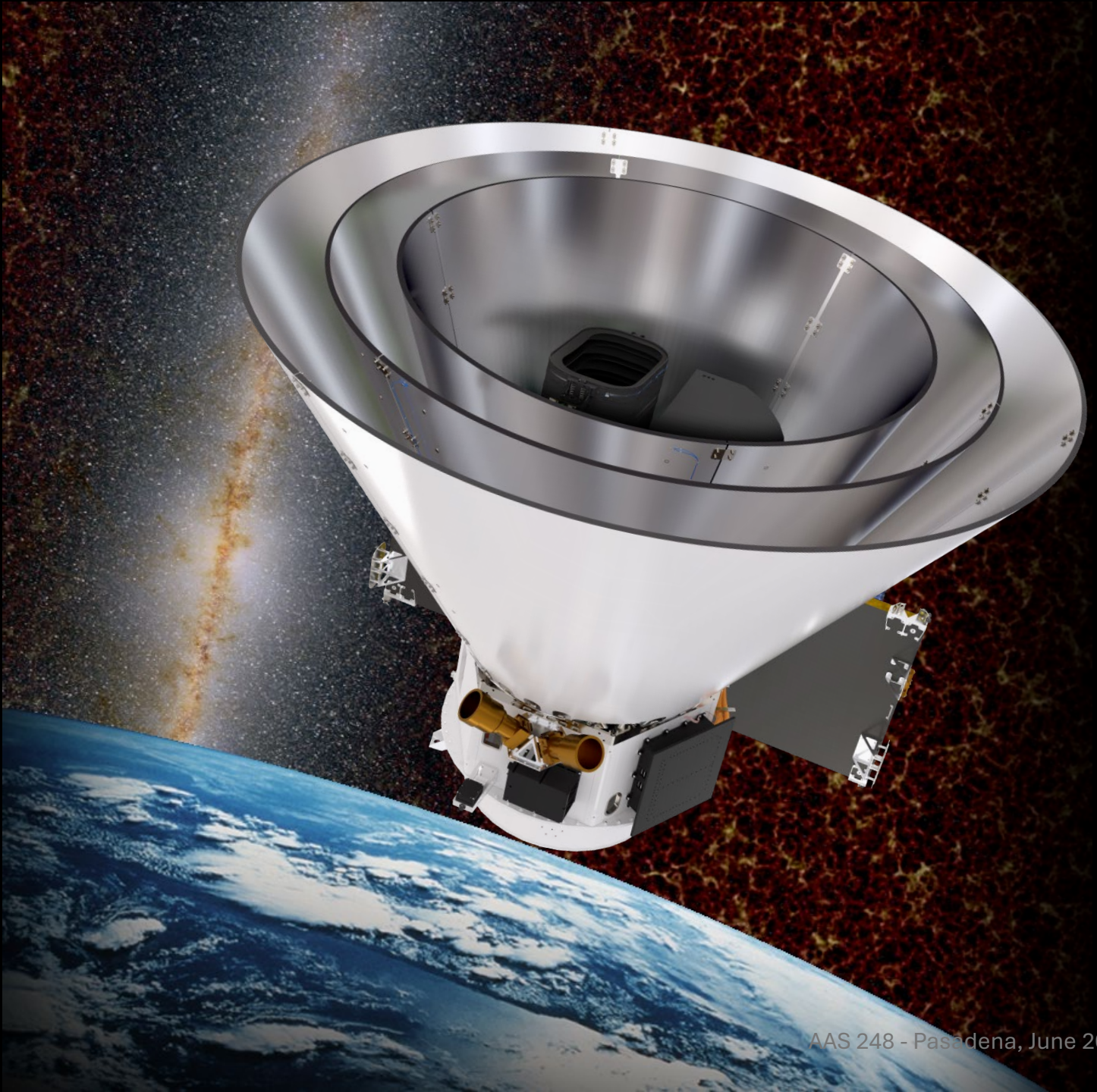

The SPHEREx Space Mission

Roberta Paladini
Caltech-IPAC

WHAT'S A *MIDEX* SATELLITE?

- Competed mission – roughly 2 opportunities per decade in astrophysics
- Proposed science, not agency directed
- PI cost cap for MIDEX is $300M in FY2022 dollars; SMEX was $145M (FY2020)
  (cap does not include contributions, inflation, NASA reserves, launch vehicle)

SPHEREx IN A NUTSHELL

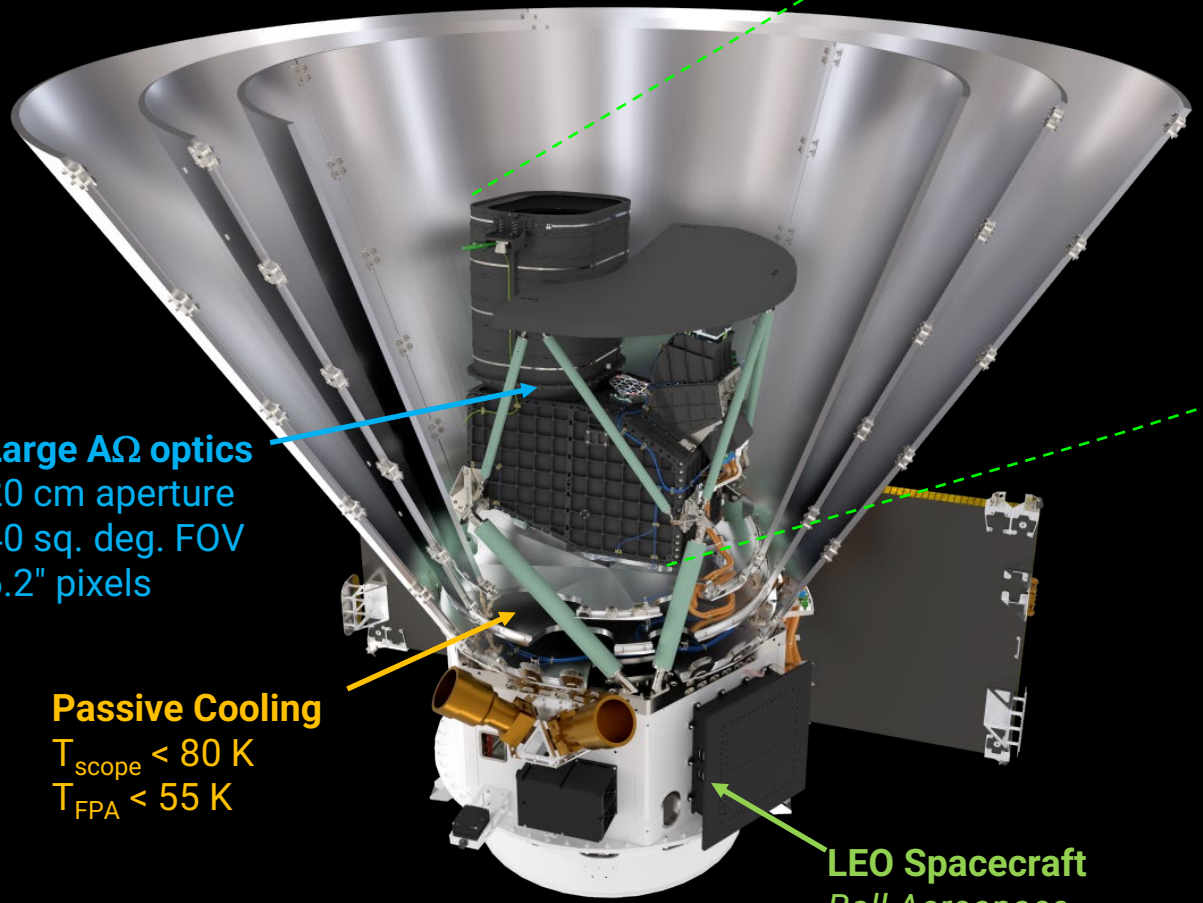

Large AΩ optics
20 cm aperture
40 sq. deg. FOV
6.2" pixels

Passive Cooling
T_{scope} < 80 K
T_{FPA} < 55 K

LEO Spacecraft
Ball Aerospace
Now BAE Systems

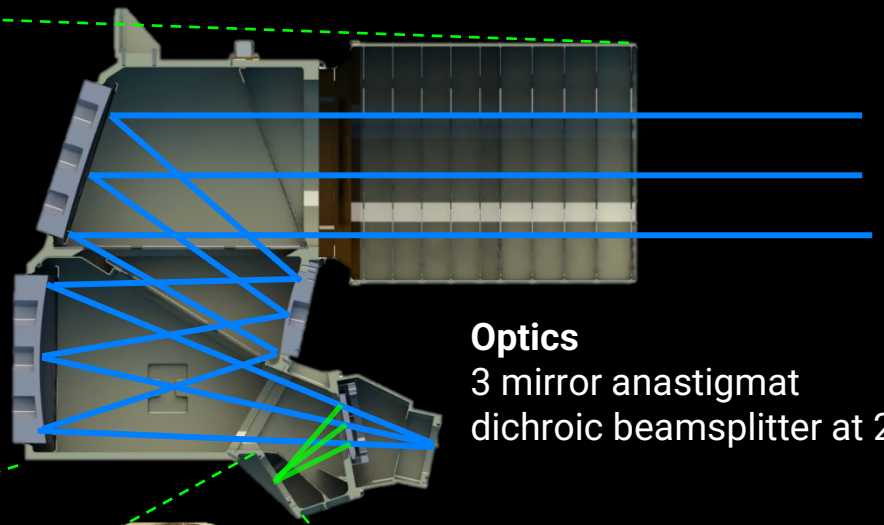

Optics
3 mirror anastigmat
dichroic beamsplitter at 2.4um

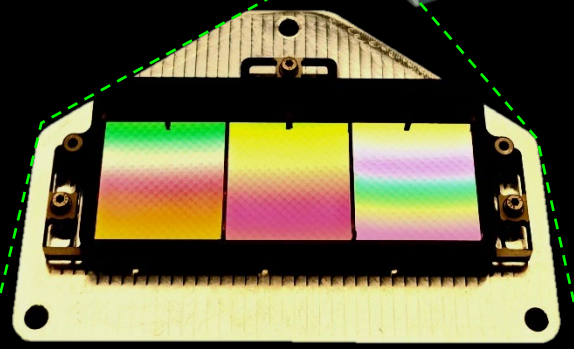

Linear Variable Filter Spectroscopy
λ = 0.75 – 5 μm
$\Delta\lambda/\lambda$ = 35 – 130
Spread across two focal planes

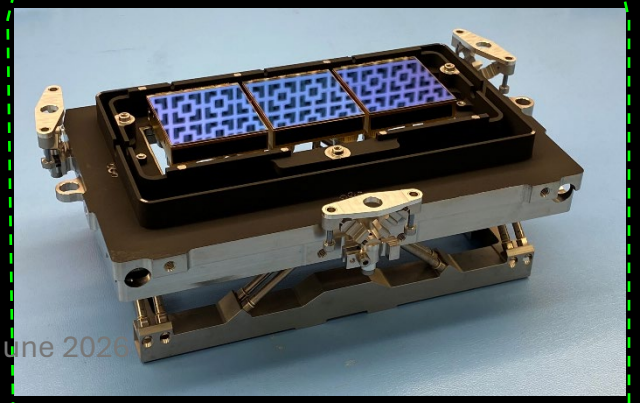

Two 3xH2RG Mosaics
Arrays located directly behind the LVFs

SPHEREx Assembles Spectra efficiently using Linear Variable Filters

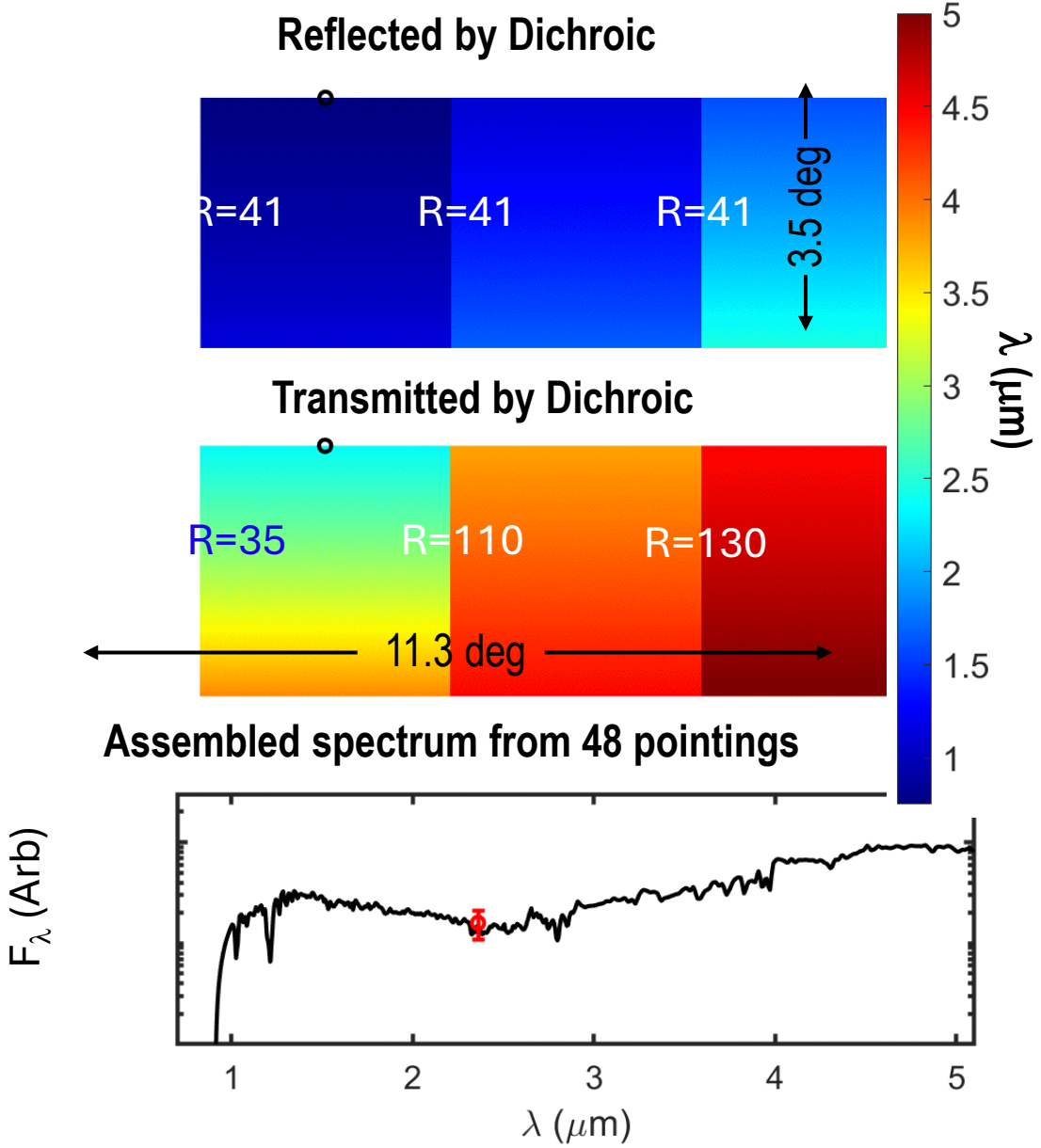

Dithering the Spacecraft attitude modulates the wavelength at which an object is measured.

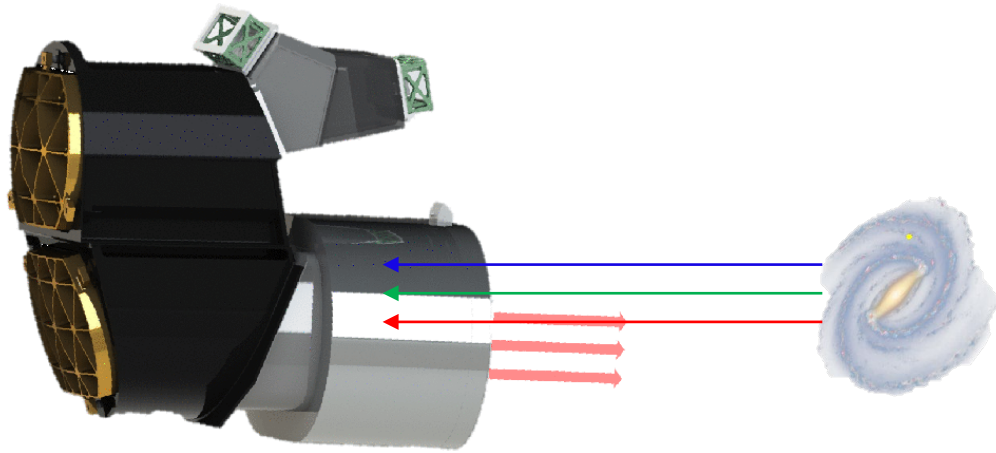

SPHEREx CORE SCIENCE

How did the Universe begin?

Improve accuracy on inflationary non-Gaussianity by a factor of 10

Measure 400+ million redshifts over the full sky

How did galaxies form & evolve?

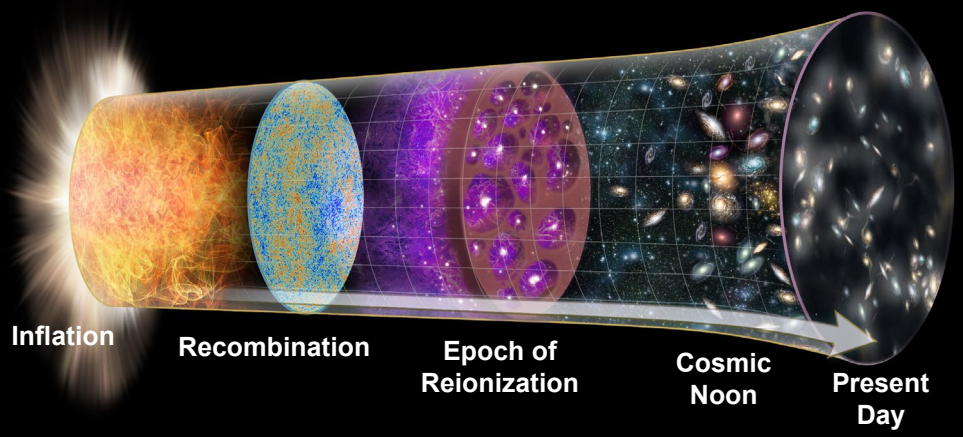

Trace the light produced by galaxies from today to the epoch of reionization

Measure galaxy clustering in deep maps of the extragalactic background light

Where is the water in our Galaxy?

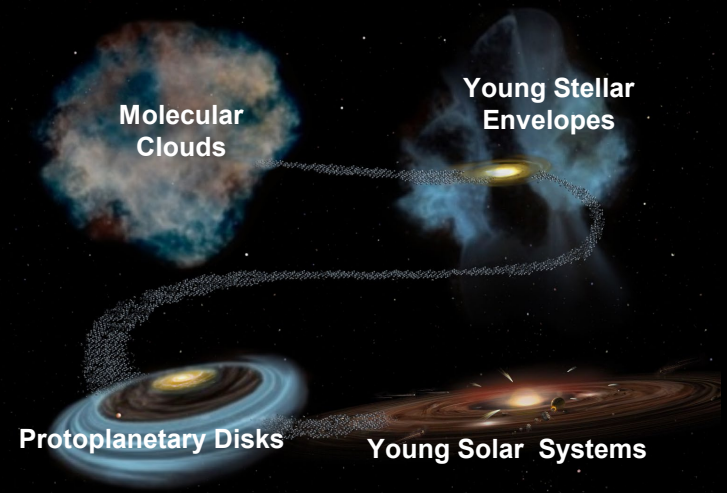

Find the amount of water and biogenic *ices* in a large sample of environments

Measure ice absorption spectra in at least 20,000 lines of sight

MARCH 11th 2025
VANDENBERG AIR FORCE BASE

SPHEREx FIRST ALL-SKY MAP (DECEMBER 2025)

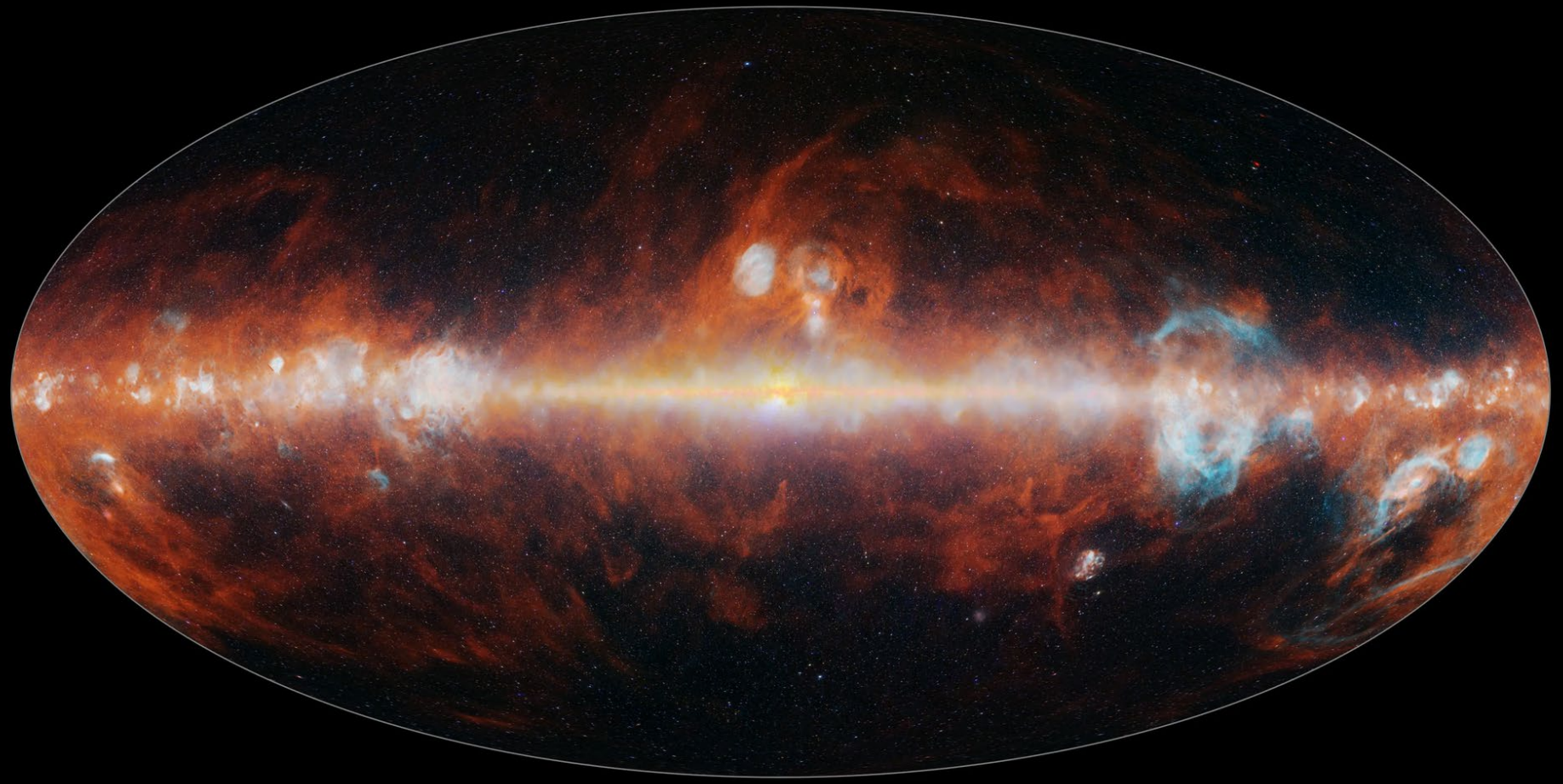

Br-α (1. 46 μm), Pa-α (1.875 μm), Pfunf □β (4.654 μm)

continuum

PAH (3.3 μm)

Credit: Robert Hurt (IPAC), Phil Korgut, Ari Cukierman (Caltech)

DATA ARE CONTINUOSLY RELEASED @ IRSA

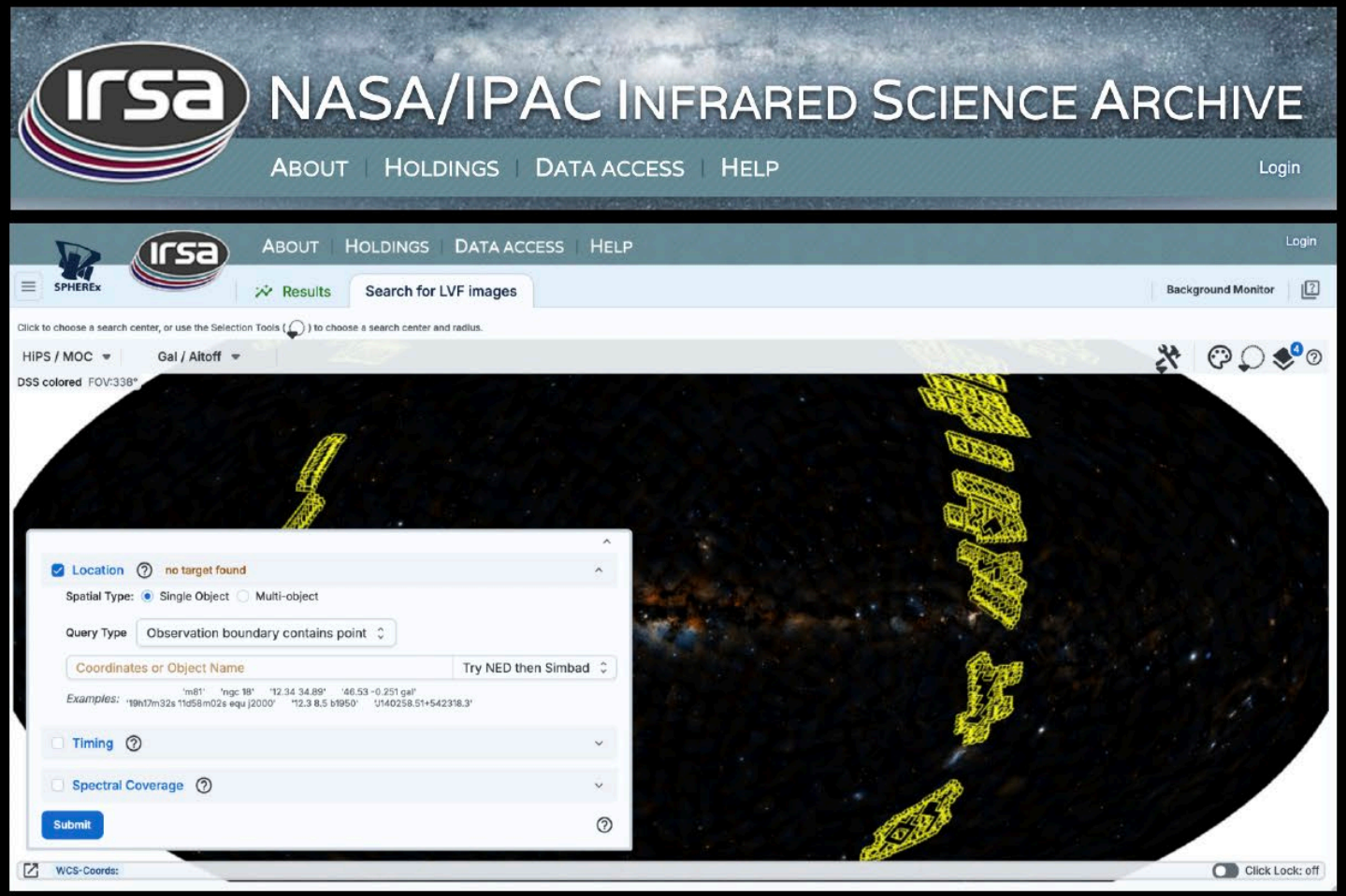

- Calibrated exposures publicly available within 2 months of collection
- Release started on July 2nd 2025 (link at https://spherex.caltech.edu)
- More data products and tools will be released throughout the mission (details at https://spherex.caltech.edu)

https://irsa.ipac.caltech.edu/Missions/spherex.html

Ackeson++25

https://spherex.caltech.edu